NSK

MEGATORQUE MOTOR™ SYSTEM
User's Manual
(Driver Unit Model EDD)

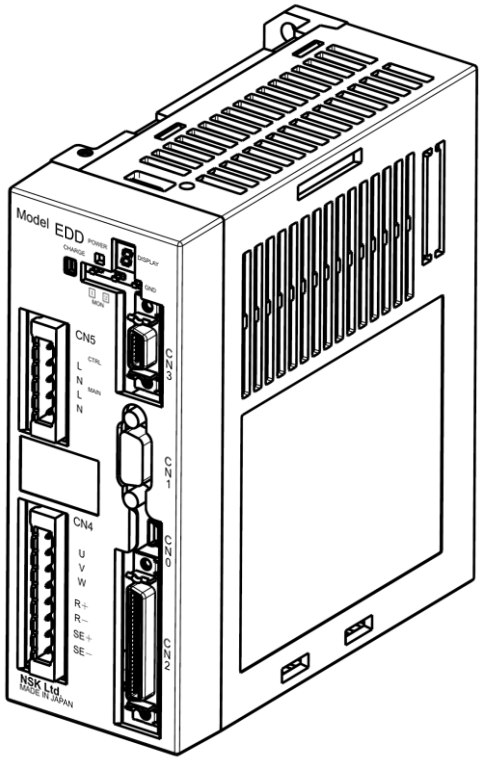

M-E099DD0C2-201

NSK Ltd.

Document Number: C20201-02

Limited Warranty

NSK Ltd. warrants its products to be free from defects in material and/or workmanship which NSK Ltd. is notified of in writing within, which comes first, one (1) year of shipment or 2400 total operation hours. NSK Ltd., at its option, and with transportation charges prepaid by the claimant, will repair or replace any product which has been proved to the satisfaction of NSK Ltd. to have a defect in material and/or workmanship.

This warranty is the sole and exclusive remedy available, and under no circumstances shall NSK Ltd. be liable for any consequential damages, loss of profits and/or personal injury as a result of claim arising under this limited warranty. NSK Ltd. makes no other warranty express or implied, and disclaims any warranties for fitness for a particular purpose or merchantability.

Copyright 2019 by NSK Ltd., Tokyo, Japan

All rights reserved.

No part of this publication may be reproduced in any form or by any means without permission in writing from NSK Ltd.

NSK Ltd. reserves the right to make changes to any products herein to improve reliability, function or design without prior notice and without any obligation.

NSK Ltd. does not assume any liability arising out of the application or use of any product described herein; neither does it convey any license under its present patent nor the rights of others.

Notes for Proper Use of Megatorque Motor System

1. For Safety Use of the Products

- This product is intended for the uses of general industry, and is not designed and/or manufactured for the uses involving human lives.
- When you consider to use this product for special uses such as nuclear control, aero-space devices, traffic control, medical devices, various safety devices or such systems, please contact us.
- Although this product is manufactured under strict quality control, be sure to provide safety equipment for applications to the facility which can cause serious accidents or losses due to the failure of this product.

2. Precautionary statement for the prolonged use of the Driver Unit

1) Temperature

- Keep the ambient temperature of the Driver Unit within 0 to 50[°C]. You cannot use the Driver Unit in a high temperature atmosphere over 50[°C]. Keep a clearance of 100 mm in the upper and the lower side of the Driver Unit when it is installed in an enclosure. If heat is built up on the upper side of the Driver Unit, provide ventilation openings on the top surface or equip a forced air cool unit to take the heat out of the Driver Unit. (Measures against contamination are required for the ventilation openings.)

2) Dust-proof and Waterproof

- Put the Driver Unit in an enclosure with the protection code of IP54 or better. Protect the Driver Unit from oil-mist, cutting oil, metal chips and paint fume, etc. Otherwise it may result in failure of electric circuits of the Driver Unit. (The IP code is to specify the protection level of enclosures from solid contamination and water. It is specified in the IEC standard and other safety regulations.)

3) Wiring/Ground

- Refer to the User's Manual for proper wiring.
- When wiring and installing the Driver Unit, take appropriate measures not to contaminate it.
- Use the product by adhering to power specifications of Driver Unit.
- For IO cable of CN2 control, use the one with cable length shorter than 2[m].
- For CN0 USB communication cable, use the double-shielded one with length shorter than 3[m], and for the connector at Driver Unit side, use USB mini-B.

4) Storing

- Store the Driver Unit in a place at where it is not exposed to rain, water, and harmful gas or liquid.
- Store the Driver Unit in the place at where it is not exposed to direct sunlight. Keep the ambient temperature and the humidity as specified.

5) The limited number of times for overwriting data to EEPROM.

- The EEPROM is used to backup all data and programs. However, the number of times for overwriting is limited to approximately 100 000 times.

3. Precautionary statement for the prolonged use of the Motor

1) Temperature

- Keep the ambient temperature of the Motor within 0 to 40[°C]. You cannot use the Motor in a high temperature atmosphere over 40[°C].

2) Dust-proof and Waterproof of the Motor

- The standard Motors PS series/PN series/PX series are not made for dust-proof or waterproof (IP30 equivalent). You cannot use the Motor in humid or oily atmosphere.

3) Use conditions

- The allowable moment load and axial load depend on the Motor size. Double check the specified limits of the Motor meet the actual use conditions.
- An excessive load or excessive offset load will cause permanent deflection of the rotor and the bearing abnormality. Be sure not to drop the Motor or not to give an excessive impact to it while transporting it or installing it.
- The flatness of the Motor mounting surface shall be 0.02 mm or less.

4) Periodic check

- Puncture of the Motor and shorting or breakage of cable may occur depending on using and environmental conditions. If the Motor is left in such conditions, it cannot exhibit its capability 100 % and will lead to a problem of the Driver Unit. We recommend conducting the periodic preventive measures such as an insulation resistance check of the Motor, to see its current condition.

4. Quick troubleshooting …*Confirm it one more time.*

1) When an alarm occurs

- When an alarm occurs right after the power is on, please refer to 4.1. Quick Troubleshooting…Alarm when the power is on .
- Did you take proper action to the alarm?
  - ◊ Follow the remedy described in the manual again.

2) When the power does not turn on and the indication display does not turn on

- Check the voltage of main and control power by a tester if the voltage is in the range of specifications that are described in the User's manual.

3) When the Motor does not move

- Turn off the Motor power and check the followings.

  Does the Motor turn smoothly?

  Is there any jerky motion?

  Does the rotation axis have any axial play?
  (Never disassemble the Motor.)
- Are the control Inputs and Outputs properly functioning?
  - ◊ Monitor the status of SVON and IPOS signals by the I/O command through the Handy Terminal.
  - ◊ Check if the voltage of input signal and 24 VDC power source are stable using an oscilloscope, etc.

4) The Motor vibrates. Positioning is inaccurate. Alarm of software thermal occurs frequently.

- Did you tune the servo parameters LO (Load inertia), SG (Servo gain), VG (Velocity loop proportional gain), PG (Position loop proportional gain), FP (Primary low-pass filter) and NP (Primary notch filter)?
  - ◊ Apply tuning to servo parameters by referring to "5. Tuning."
- Are the fixing bolts of the load and the Motor securely fastened?
  - ◊ Check and fasten them tightly if necessary.
- Connect the ground terminal of the Driver Unit to one point grounding. (Refer to the User's Manual for wiring.)
- Is any external force in rotational direction when the Motor is stopping with the Servo lock state? (It leads to the Motor overheat if external force is applied.)

5) Breaker trip occurs frequently.

- When the System recovers from the breaker trip by turning on the power again, take the following action.
  - ◊ Select a breaker of which rated current suits to the power capacity of the Driver Unit.

4.1. Quick Troubleshooting…Alarm when the power is on

◆ The alarm occurs when the power is turned on if input signals of EMST (Emergency stop, Pin No.3) and OTP/OTM (Over travel limits, Pin No. 5 and 6) of the connector CN2 are not connected.
However, the Driver Unit is not defective.

◊ This is because the ports of EMST input and OTP/OTM inputs are set to the normally closed contact (B contact) at the factory.

◆ To cancel the alarm, wire these ports or follow the procedure below to change the polarity to the normally open contact (A contact).

Step 1: identify the alarm.

1) Turn on the power of the Driver Unit.

2) Check the 7 segments LED on the front panel of the Driver Unit.

◊ The LED changes in order of [F] → [4] in case of "Emergency stop."

◊ The LED changes in order of [F] → [3] in case of "Travel limit over" alarm.

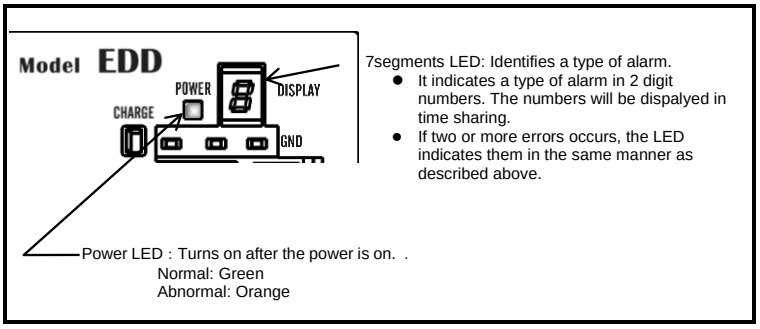

When an alarm occurs

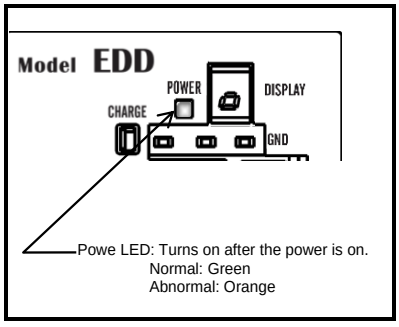

In normal state

Step 2: Polarity setting of Input ports.

1) Input the command MO (Motor Off) to make the Motor servo off to set the polarity of control inputs.

M O ENT

2) Input the command PI0 (Edit input function).

P I 0 ? ENT

3) Following the display of the parameter FN (Function), the parmaeters NW (Anti-chattering timer) AB (Input polarity) appear sequentially by a press of SP key, then the prompt "?" appears on the bottom line.

SP SP

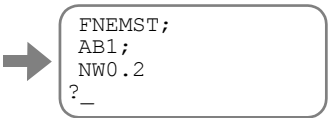

◊ SP key operation is not necessary in the terminal screen of EDD MegaTerm. After operating (2) above, proceed to operation (4).

4) Input the paramter AB0 to change the polarity to the normally open contact.

After the imput, a prompt "?" appears again, press the ENT key when the prompt "?" appears again.

Thus the input EMST is set to the normally open contact.

A B 0 ? ENT

ENT

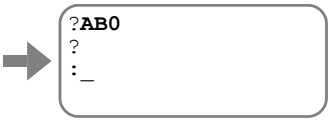

5) Input the command SV (Servo on) to turn on the servo of the Motor..

S V ENT

◊ When setting the input OTP to the normally closed contact, input the command PI2 and follow the procedure above.

◊ When setting the input OTM to the normally closed contact, input the command PI3 and follow the procedure above.

5. Others

- Combination of the Motor and the Driver Unit shall conform to the specification.
- Be sure to keep the record of parameter settings.
- Do not modify the cable set.
- Lock the connectors securely and check for loose fixing screw(s).
- Please keep expendable parts and backup parts. (The Motor, the Driver Unit and the Cable set for replace)
- Use alcohol for cleaning, and never apply thinner.

(Blank Page)

Conformity with the International Safety Regulations

The Megatorque Motor Systems conform to the EU Directives (CE Marking) and Underwriters Laboratory (UL) regulations.

Conformity with the EU Directives

The Megatorque Motor System is a machine component that conforms to provisions of the Low Voltage Directive 2014/35/EU and EMC Directives 2014/30/EU. This will help a user in easy conformity with the EU Directives (CE marking) of a machine into which the Megatorque Motor System is incorporated.

Table 1: List of compliance standard

Item	Conformed regulation		
Megatorque Motor	EN60034-1	: Rotating electrical machines	Low Voltage Directive
Motor / Driver Unit	EN61800-5-1	: Adjustable speed electrical power drive systems	
	EN55011	: Conducted emission(Group1, Class A)	Electromagnetic Compatibility Directive
	EN55011	: Radiated emission(Group1, Class A)	
	EN61000-6-4	: Emission standard for industrial environments	
	EN61000-6-2	: Immunity for industrial environments	
	EN61800-3	: EMC requirements and specific test methods (Emission: Category C2) (Immunity: Second environment)	
	EN61000-4-2	: Electrostatic discharge immunity	
	EN61000-4-3	: Radiated electromagnetic field immunity	
	EN61000-4-4	: Electric first transient/ burst immunity	
	EN61000-4-5	: Surge immunity	
	EN61000-4-6	: Conducted disturbance immunity	
	EN61000-4-8	: Power frequency magnetic field immunity	
	EN61000-4-11	: Voltage Dips & Interruptions immunity	

Warning *In a residential environment, this product may cause radio interference, in which case supplimentary appropriate mitigation measures may be required.*

Conformity with EMC Directive

NSK defined installation models (conditions) for the Megatorque Motor PS/PN Series, including installation space and wiring between Driver Units and Motors, and set EMC Directive based on 4 [m] cable models, which have been certified by TÜV SÜD Product Service GmbH.
When Megatorque Motor PS/PN Series is incorporated into machinery, real-world installation and/or wiring conditions may differ from those of established models. Therefore, it is necessary to check for EMC Directive compliance (especially radiation and conduction noise) in the machinery incorporating the PS/PN Series Motors.

Conditions to Conform with EU Directives

The wiring example shown below is one of our recommendations for the conformity with the EU Directives.

Figure 1: Wiring diagram (Example)

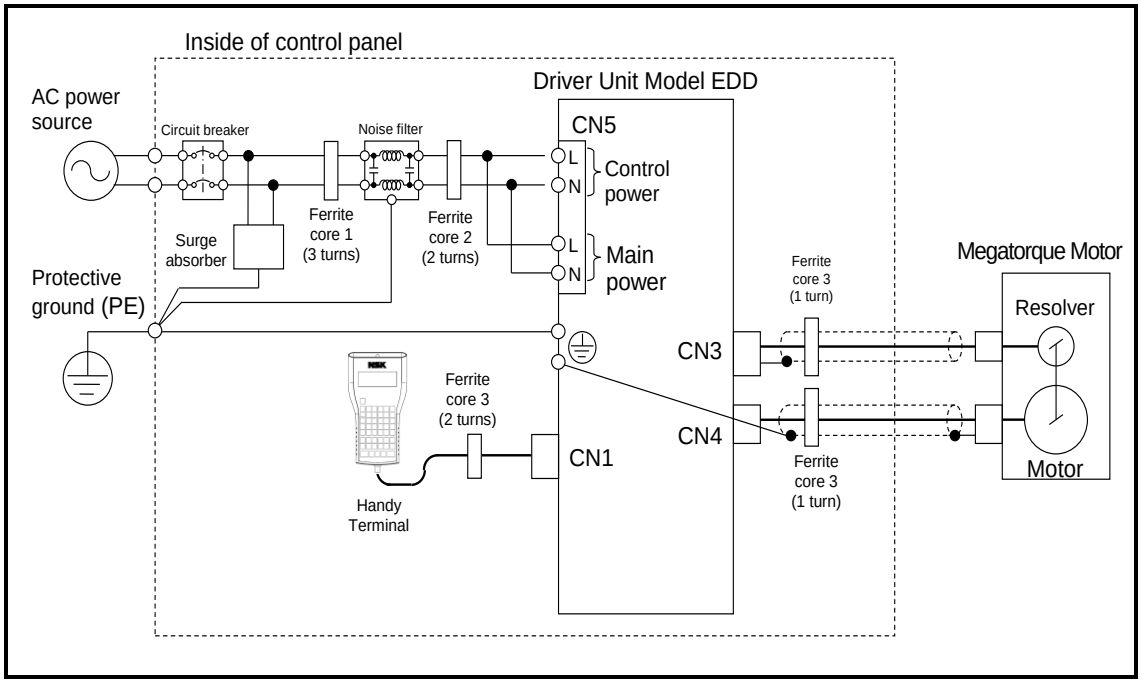

◆ Environmental conditions

The Driver Unit must be used in the environmental condition of Pollution Degree1 or 2 as specified by IEC60664-1. The Driver Unit shall be installed into a control panel with the structure that does not allow penetration of water, oil or dust (IP54).

◆ Power source

The Driver Unit Model EDD shall be used in the environmental condition of "Over-voltage category III" as specified by IEC60664-1.

◆ Circuit breaker

Install a circuit breaker that conforms to IEC standard and UL safety standard between the power source and the Driver Unit.

◆ Noise filter

Install a noise filter between the power source and the Driver Unit.

◆ Ferrite core

Ferrite cores for signal cable shall be set to the power cable, the Motor cable and the resolver cable.

◆ Protective Grounding

Be sure to ground the protective grounding terminal of the Driver Unit Model EDD to the protective ground (PE) of the control panel for a measure against electrical shock.

Table 2: List of recommended parts

Item	Specification	Model Number	Remarks
Circuit breaker	Rated current: 15 [A]	BW32AAG (Fuji Electric)	Conforms to IEC regulations and approved by UL
Noise filter	Single phase: 250 [VAC], 10 [A]	FN2070-10/06 (SCHAFFNER)	
Surge absorber	–	R-A-V781BWZ-4 (Okaya electric)	
Ferrite core 1	–	E04RA400270150 (Seiwa Electric MFG)	
Ferrite core 2	–	E04SR301334 (Seiwa Electric MFG)	For the Terminal
Ferrite core 3	–	E04SR211132 (Seiwa Electric MFG	

Conformity with Underwriters Laboratories Standards

◆ Motors

Motor is compliant with UL1004-1 standard. (File number:E216970)

◆ Driver Unit Model EDD

Driver Unit Model EDD is compliant with UL61800-5-1 standard. (File number:E216221)

◆ Cable set

The cable material which is conforming to UL standard is used.

Be sure to meet the following as they are the supplementary conditions for the qualification.

◆ Environmental conditions

The Driver Unit must be used in the environmental condition of Pollution Degree1 or 2 as specified by IEC60664-1.
The Driver Unit shall be installed into a control panel with the structure that does not allow penetration of water, oil or dust (IP54).

◆ Power source

The Driver Unit Model EDD shall be used in environmental condition of "Over-voltage category III" as specified by IEC60664-1.
Suitable for use on a circuit capable or delivering not more than 5,000[Arms] symmetrical amperes, 240[V] maximum.

◆ Circuit breaker

Install a circuit breaker (rated 15[A]) that conforms the UL safety standard between the power source and the Driver Unit. (Please refer to Table 2 above for the specifications.)

◆ Protective Grounding

Be sure to ground the protective grounding terminal of the Driver Unit Model EDD to the protective ground (PE) of the control panel for a measure against electrical shock.

◆ Wiring

- Use 75 [°C] CU wire only.
- Wire range for field wiring terminals are marked adjacent to the terminal, on the wiring diagram or instruction manual.

Table 3: Acceptable lead diameter

Model No.	Wire Range（AWG）	
	Input	Output
All Models	18	19

◆ Others

- Solid state Motor overload protection level of 115 [%] of FLA is provided in each model.
- Integral solid state short circuit protection does not provide branch circuit protection. Branch circuit protection must be provided in accordance with the National Electrical Code and any additional local codes.
- Motor over temperature protection is not provided by the driver unit.

⚠ *Danger : Megatorque Motor PN series with Brake unit, Megatorque Motor Z series with High environmental resistance, Megatorque Motor High speed PX series with its Driver Unit, and their system as a combination of Motor and Driver Unit do not comply with UL and CE marking regulation. Driver Units comply with UL Standard and CE Mark when used with a standard PN series Megatorque Motor. However, they do not comply with UL standards or CE Mark when used with Megatorque Motor PN series with Brake unit and Megatorque Motor Z series with High environmental resistance.*

⚠ *Caution : Risk of Electric Shock- Capacitor discharge time is at least 5 [min]*

Contents

1. Introduction ---------- 1-1
1.1. Notes to Users ---------- 1-2
1.1.1. Notes for Safety ---------- 1-2
1.1.2. Precautions for Use ---------- 1-2
1.1.3. Interchangeability of Motor and Driver Unit 1-5
1.2. Terminology ---------- 1-6

2. Specifications ---------- 2-1
2.1. System Configuration ---------- 2-1
2.1.1. Control Mode ---------- 2-1
2.1.2. Examples of System Configuration ---------- 2-2
2.2. Reference Number and Coding ---------- 2-4
2.2.1. Mega torque Motor ---------- 2-4
2.2.2. Driver Unit Model EDD ---------- 2-4
2.2.3. Cable Set ---------- 2-4
2.2.4. Handy Terminal ---------- 2-4
2.3. Name of Each Part ---------- 2-5
2.3.1. Mega torque Motor ---------- 2-5
2.3.1.1. PS Series ---------- 2-5
2.3.1.2. PN Series ---------- 2-6
2.3.1.3. PX Series ---------- 2-7
2.3.2. Driver Unit Model EDD ---------- 2-8
2.3.3. Handy Terminal ---------- 2-9
2.4. Standard Combination List ---------- 2-10
2.4.1. Motor and Driver Unit Model EDD Combinations ---------- 2-10
2.4.2. Cable Set ---------- 2-11
2.4.3. Handy Terminal ---------- 2-11
2.5. Motor Specifications ---------- 2-12
2.5.1. PS Series ---------- 2-12
2.5.2. PN Series ---------- 2-13
2.5.3. PX Series ---------- 2-13
2.5.4. Axial Load and Moment Load ---------- 2-14
2.6. External Dimensions ---------- 2-15
2.6.1. Megatorque Motors ---------- 2-15
2.6.1.1. PS Series ---------- 2-15
2.6.1.2. PN Series ---------- 2-19
2.6.1.3. PX Series ---------- 2-21
2.6.2. Driver Unit Model EDD ---------- 2-22
2.6.3. Cable Set ---------- 2-23
2.6.3.1. Stationary Cable ---------- 2-23
2.6.3.2. Flexible Cable ---------- 2-23
2.7. Driver Unit Specifications ---------- 2-25
2.8. USB Interface Specifications ---------- 2-27
2.8.1. CN0: USB Communication Connector ---------- 2-27
2.8.1.1. Pin-Out (CN0) ---------- 2-27
2.8.1.2. CN0 Signal List ---------- 2-27
2.9. RS-232C Interface Specifications ---------- 2-28
2.9.1. CN1: RS-232C Serial Communication Connector ---------- 2-28
2.9.1.1. CN1 Pin-Out ---------- 2-28
2.9.1.2. CN1 Signal List ---------- 2-28
2.10. Specifications of Control Input/Output Interface 2-29
2.10.1. CN2: Control Input/Output Signal Connector ---------- 2-29
2.10.1.1. CN2 Pin-Out ---------- 2-30
2.10.1.2. CN2 Signal List ---------- 2-31
2.10.2. CN2 Interfacing ---------- 2-33
2.10.2.1. General Input Signal ---------- 2-33
2.10.2.2. Pulse Train Input Signal ---------- 2-34
2.10.2.3. Analog Command Input Signal ---------- 2-35
2.10.2.4. Output Signal ---------- 2-36
2.10.2.5. Position Feedback Signal Output ---------- 2-36
2.10.2.6. Analog Monitor Output ---------- 2-37
2.11. CN3: Resolver Cable Connector ---------- 2-38
2.11.1. CN3 Pin-Out ---------- 2-38
2.11.2. CN3 Signal List ---------- 2-38
2.12. CN4: Motor Connector ---------- 2-39
2.12.1. CN4 Pin-Out ---------- 2-39
2.12.2. CN4 Signal List ---------- 2-39
2.13. CN5: Connector for Power Supply ---------- 2-40
2.13.1. CN5 Pin-Out ---------- 2-40
2.13.2. CN5 Wiring Diagram ---------- 2-40

3. Unpacking, Installation and Wiring ---------- 3-1
3.1. Unpacking ---------- 3-1
3.1.1. Receiving Check ---------- 3-1
3.1.2. Motor and Driver Unit Model EDD Combinations ---------- 3-1
3.2. Installation ---------- 3-2
3.2.1. Motor Mounting ---------- 3-2
3.2.1.1. Environmental Conditions of Motor ---------- 3-2
3.2.1.2. Motor Installation ---------- 3-2
3.2.1.3. Coupling Load to Motor ---------- 3-3
3.2.1.4. Confirmation of Use Conditions ---------- 3-4
3.2.1.5. Dummy Inertia ---------- 3-4
3.2.2. Installation of Driver Unit ---------- 3-5
3.3. Wiring ---------- 3-6
3.3.1. Connection of Cable Set ---------- 3-6
3.3.2. Connecting Power ---------- 3-7
3.3.3. Ground Connection ---------- 3-8
3.3.4. Connector Wiring ---------- 3-9
3.3.4.1. Wiring Example (CN2) ---------- 3-9
3.4. Turning on Main Power ---------- 3-10
3.4.1. Precautions Before Power-on ---------- 3-10
3.4.2. Points to be Checked When Power-on ---------- 3-11
3.4.3. Polarity Setting of Control Input Port (Normally Open Contact and Normally Closed Contact) ---------- 3-12
3.4.4. Power on and Servo on ---------- 3-13

4. RS-232C Communication and USB Communication ---------- 4-1
4.1. RS-232C Communication (Handy Terminal Communication) ---------- 4-2
4.1.1. Check on Handy Terminal ---------- 4-3
4.1.2. Setting Parameters ---------- 4-3
4.1.2.1. Input of the Password ---------- 4-3
4.1.2.2. Reset to Shipping Set ---------- 4-4
4.1.3. Readout of Parameter ---------- 4-4
4.1.3.1. Monitoring Parameters by a Group ---------- 4-5
4.1.3.2. Monitoring Parameters Altered from Shipping Set ---------- 4-5

4.1.4. Monitoring the Current Status ---------- 4-6
4.1.4.1. Inputting a Command while Monitoring Multiple Conditions --------- 4-6
4.2. USB Communication (EDD MEGATERM) --------- 4-7
4.2.1. Setting Application Software ---------- 4-9
4.2.2. Establishing Communication ----------4-10
4.2.3. Setting Parameters ----------4-10
4.2.3.1. Input of the Password ----------4-11
4.2.3.2. Reset to Shipping Set ----------4-12
4.2.4. Readout of Parameter ----------4-12
4.2.4.1. Monitoring Parameters by a Group --4-13
4.2.4.2. Monitoring Parameters Altered from Shipping Set ----------4-14
4.2.5. Monitoring the Current Status ----------4-14
4.2.5.1. Inputting a Command while Monitoring Multiple Conditions --------4-15

5. Tuning ----------5-1
5.1. Tuning Flowchart ---------- 5-1
5.2. Tuning Level 1: Automatic Tuning ---------- 5-2
5.2.1. Precautions for Automatic Tuning ---------- 5-3
5.2.2. Initialization of Servo Parameters ---------- 5-4
5.2.3. Automatic Tuning ---------- 5-5
5.2.4. Trial Running ---------- 5-7
5.3. Tuning Level 2: Servo Gain Tuning ---------- 5-9
5.3.1. Input of Load moment of Inertia ---------- 5-9
5.3.1.1. When the Load moment of inertia is Unknown ---------- 5-9
5.3.2. Minor Tuning of Servo Gains ----------5-10
5.4. Tuning Level 3: Manual Tuning ----------5-13
5.4.1. Precautions for Manual Tuning ----------5-13
5.4.2. Setting Velocity Loop Proportional Gain (VG) 5-13
5.5. Setting Filters (Tuning Level 2) ----------5-15
5.5.1. Setting Low-pass Filter ----------5-15
5.5.2. Setting Notch Filter ----------5-16

6. Operation ----------6-1
6.1. Preparation ---------- 6-1
6.1.1. Wiring Check ---------- 6-1
6.1.2. Operation Procedure ---------- 6-1
6.2. Position Scale ---------- 6-2
6.2.1. Resolution of position Scale ---------- 6-2
6.2.2. Direction of Position Scale ---------- 6-3
6.2.3. Setting Home Position ---------- 6-4
6.2.4. Software Over Travel Limit ---------- 6-6
6.2.4.1. Setting the Limits by Teaching --------- 6-7
6.2.4.2. Setting the Limits by Direct Input ------ 6-8
6.3. Positioning Operation ---------- 6-9
6.3.1. Positioning Command ---------- 6-9
6.3.2. Program Positioning Operation ----------6-10
6.3.2.1. Program Operation via Control Inputs and Outputs ----------6-11
6.3.2.2. Program Positioning Operation via RS-232C Communication ----------6-13
6.3.2.3. Programming ----------6-14
6.3.2.4. Program Sequence ----------6-20
6.3.3. Pulse Train Command Positioning Operation 6-23
6.3.3.1. Format of Pulse Train Input ----------6-25
6.3.3.2. Resolution of Pulse Train ----------6-26
6.3.3.3. Input Timing ----------6-27
6.3.4. Jogging ----------6-28
6.3.4.1. Jogging with Control Input and Output 6-29
6.3.4.2. Jogging via RS-232C Communication 6-30
6.3.5. RS-232C Communication Positioning Operation ----------6-31
6.3.6. Velocity and Torque Control by Analog Input 6-33
6.3.6.1. Selection of Control Mode ----------6-33
6.3.6.2. RS-232C Communication Operation 6-34
6.3.6.3. Analog Input Operation ----------6-35
6.3.6.4. Analog Command Input Offset --------6-36

7. Operational Function ---------- 7-1
7.1. Control Input ---------- 7-1
7.1.1. Emergency Stop: EMST ---------- 7-1
7.1.2. Alarm Clear: ACLR ---------- 7-2
7.1.3. Hardware Over Travel Limit: OTP and OTM 7-3
7.1.4. Servo on: SVON ---------- 7-4
7.1.5. Program Start: RUN Internal Program Channel Selection: Input PRG0 to PRG7 --- 7-6
7.1.6. Stop: STP ---------- 7-7
7.1.7. Jogging: JOG Jogging Direction: DIR ------- 7-9
7.2. Control Output ----------7-10
7.2.1. Driver Unit Ready: DRDY ----------7-10
7.2.2. Warning: WRN ----------7-10
7.2.3. Over Travel Limit Direction: OTPA and OTMA ----------7-11
7.2.4. Servo State: SVST ----------7-13
7.2.5. In-operation: BUSY ----------7-14
7.2.6. In-position: IPOS ----------7-15
7.2.6.1. CFIN Mode: Parameter FW < 0 ------7-16
7.2.6.2. IPOS Mode (Parameter FW = 0) -----7-17
7.2.6.3. FIN Mode (Parameter FW > 0) -------7-18
7.2.6.4. In-position Limit: Parameter IN -------7-19
7.2.6.5. Parameter IS: In-position Stability Timer ----------7-19
7.2.7. Target Proximity: NEARA and NEARB -----7-20
7.2.8. Position Feedback Signal ----------7-21
7.2.8.1. Resolution of Position Feedback Signal ----------7-22
7.2.8.2. Signal Output Timing ----------7-24
7.3. RS-232C/USB Monitor ----------7-25
7.3.1. Monitoring Way for Control Input/Output Signal ----------7-26
7.3.1.1. Electrical Condition Monitor: Monitor IO0 ----------7-27
7.3.1.2. Monitor for Internal Recognition of Input and Output State: Monitor IO1 --------7-28
7.3.1.3. Monitor for State of Input Functions: Monitor IO2 ----------7-28
7.3.1.4. Monitor for State of Output Functions: Monitor IO3 ----------7-29
7.3.1.5. Monitor for Individual Function --------7-29
7.3.2. Alarm Monitor ----------7-30
7.3.2.1. Monitor All Occurring Alarms at One Time ----------7-30
7.3.2.2. Monitor for Alarm History and Event: Monitor TA/HI ----------7-31
7.3.3. Pulse Train Counter: Monitor RP ----------7-32
7.3.4. Position Feedback Signal Counter: Monitor FK ----------7-32
7.3.5. Current Position Monitor: Monitor TP ------7-32
7.3.6. Monitor for Software Thermal Loading: Monitor TJ ----------7-33
7.4. Analog Monitors ----------7-34
7.4.1. Use of Preset Monitors ----------7-35

7.4.2. Customization of Monitor Data ---------- 7-36
7.4.2.1. Analog Monitor for State of Control Inputs and Outputs Functions --------- 7-37

8. More Advanced Function ---------- 8-1
8.1. Assignment of Input/Output Function ---------- 8-1
8.1.1. Function of Control Input ---------- 8-2
8.1.2. Function of Control Output ---------- 8-4
8.1.3. Editing Function of Control Input and Output -- 8-6
8.1.3.1. Editing Control Input Function --------- 8-6
8.1.3.2. Editing Control Output Function ------- 8-8
8.1.3.3. Masking Control Output Function ---- 8-10
8.1.3.4. Forcible Output in Setting of Output Port Function ---------- 8-11
8.2. Extended Control Input ---------- 8-12
8.2.1. Input HOLD: HLD ---------- 8-12
8.2.2. Velocity Override: ORD ---------- 8-13
8.2.3. Integration OFF: IOFF ---------- 8-14
8.2.4. Home Return Start: HOS ---------- 8-15
8.2.5. Home Position Limit: HLS ---------- 8-15
8.3. Extended Control Output ---------- 8-16
8.3.1. In-zone Output: ZONEA, ZONEB, and ZONEC ---------- 8-16
8.3.2. Outputs of Operating Conditions ---------- 8-17
8.3.2.1. Position Error: TEU (Position Error, Under) and TEO (Position Error, Over) ---------- 8-18
8.3.2.2. Velocity: Outputs TVEU (Velocity Error,Under) and TVEO (Velocity Error, Over) -------- 8-19
8.3.2.3. Velocity: Outputs TVU (Velocity, Under) and TVO (Velocity, Over) ---------- 8-19
8.3.2.4. Torque Command: Outputs TTU (Torque Command, Under) and TTO (Torque Command, Over) ------- 8-19
8.3.2.5. Thermal Loading: Outputs TJU (Thermal Loading, Under) and TJO (Thermal Loading, Over) --- 8-20
8.3.3. Travel Limit Output (±): OTXA ---------- 8-21
8.3.4. Output Normal: NRM ---------- 8-22
8.3.5. Home Return Completed: HOME ---------- 8-22
8.3.6. Home Position Defined: HCMP ---------- 8-22
8.4. Teaching ---------- 8-23
8.4.1. Preparation for Teaching ---------- 8-24
8.4.2. Teaching of Parameter ---------- 8-24
8.4.3. Teaching the Position Data of Positioning Program ---------- 8-25
8.5. Tuning ---------- 8-26
8.5.1. Servo Block Diagram ---------- 8-26
8.5.2. Digital Filter ---------- 8-28
8.5.3. Position Loop Dead Band ---------- 8-29
8.5.4. Automatic Gain Switching ---------- 8-30
8.6. Positioning Operation ---------- 8-31
8.6.1. Acceleration Profiling and Individual Acceleration Setting ---------- 8-31
8.6.2. Examples of Acceleration Profiling and Individual Setting of Acceleration and Deceleration ---------- 8-33
8.6.3. Shorter Way Positioning ---------- 8-34
8.6.4. User Scale Positioning ---------- 8-36
8.7. Program Operation ---------- 8-39
8.7.1. Change of Parameter via Program Operation ---------- 8-39
8.7.2. Automatic Program Execution at Power on -- 8-41
8.8. Home Return ---------- 8-45
8.8.1. Home Return Operation via the Home Position Sensor ---------- 8-46
8.8.1.1. Home Return Mode: OS4 ---------- 8-46
8.8.1.2. Home Return Mode: OS5 ---------- 8-48
8.8.1.3. Home Return Mode: OS1 ---------- 8-48
8.8.1.4. Home Return Mode: OS3 ---------- 8-48
8.8.2. Home Return with Travel Limit ---------- 8-49
8.8.2.1. Home Return Mode: OS7 ---------- 8-49
8.8.3. Teaching of Home Position ---------- 8-51
8.8.3.1. Home Return Mode: OS6 ---------- 8-51
8.8.3.2. Teaching of Home Position in Servo-off Sate ---------- 8-52
8.8.4. Position Adjustment of Home Limit Sensor -- 8-53
8.8.5. Teaching of Home Position Offset ---------- 8-54
8.9. RS-232C Communication ---------- 8-55
8.9.1. Specifications of Communication ---------- 8-55
8.9.2. Communication Procedure ---------- 8-55
8.9.2.1. Power on ---------- 8-56
8.9.2.2. Command Entry ---------- 8-57
8.9.2.3. Cancelling Command ---------- 8-58
8.9.2.4. Input of the Password ---------- 8-58
8.9.2.5. Readout of Parameter Settings and Internal State ---------- 8-59
8.9.2.6. Reading out Parameter Settings by a Group ---------- 8-60
8.9.2.7. Error Message ---------- 8-61

9. Details of Command and Parameter --- 9-1
9.1. Difference of RS-232C Communication and USB Communication ---------- 9-1
9.1.1. Different Commands between RS-232C Communication and USB Communication 9-1
9.1.2. Simultaneous Operation of RS-232C Communication and USB Communication 9-1
9.1.3. Command Parameters Invalid in USB Communication ---------- 9-1
9.1.4. Inhibited Operations in USB Communication ---------- 9-2
9.2. Handling Instruction of Command and Parameter 9-3
9.2.1. Character String of Command ---------- 9-3
9.2.2. Grammar of Command ---------- 9-3
9.2.3. Error Message ---------- 9-4
9.2.4. Multi-statement on a Line ---------- 9-4
9.2.5. Wildcard Search ---------- 9-5
9.2.6. Repeating Readout ---------- 9-5
9.2.7. Multi-monitor ---------- 9-6
9.2.8. Initialization of Specified Parameter -------- 9-6
9.2.9. Adjusting ---------- 9-7
9.2.10. Output to Analog Monitor ---------- 9-7
9.3. Glossary of Command and Parameter ---------- 9-8
9.4. Parameter List ---------- 9-84

10. Maintenance ---------- 10-1
10.1. Backup Parts ---------- 10-1
10.2. Storing the Parts ---------- 10-1
10.3. Periodic Check ---------- 10-2
10.3.1. Motor ---------- 10-2
10.3.2. Driver Unit (Including Cables and Handy Terminal) --- 10-2
10.4. Periodic Replacement of Parts ---------- 10-3
10.4.1. Motor ---------- 10-3

10.4.2. Cables ---------- 10-3
10.4.3. Driver Unit ---------- 10-4
10.5. Repair Service ---------- 10-6
10.6. Warranty Period and Covering Range ---------- 10-7
10.6.1. Warranty Period ---------- 10-7
10.6.2. Limited Warranty ---------- 10-7
10.6.3. Immunities ---------- 10-7
10.6.4. Service Fee ---------- 10-7
10.6.5. Notice for discontinuity of the Product and Duration of Support ---------- 10-7
10.6.6. Application to special uses ---------- 10-7

11. Alarm and Warning ---------- 11-1
11.1. Identifying Alarm and Warning ---------- 11-1
11.1.1. LED Alarm Indicator ---------- 11-1
11.1.2. Confirmation of Alarm and Warning -------- 11-2
11.1.3. History of Alarm and Warning ---------- 11-3
11.2. List of Alarm and warning ---------- 11-5
11.2.1. Normal State ---------- 11-5
11.2.2. Condition in the State of Alarm and Warning 11-6
11.2.2.1. Alarm ---------- 11-6
11.2.2.2. Warning ---------- 11-7
11.2.2.3. Over Travel Limit ---------- 11-7
11.3. Cause and Remedy ---------- 11-8
11.3.1. CPU Error ---------- 11-8
11.3.2. Alarm A0: Disconnected Sensor Cable ---- 11-8
11.3.3. Alarm A1: Position Data Error ---------- 11-9
11.3.4. Alarm A2: Motor Cable Disconnected ----- 11-9
11.3.5. Warning A3: Software Thermal ---------- 11-10
11.3.6. Alarm A4: Excess Velocity ---------- 11-11
11.3.7. Warning A5: Home Position Undefined - 11-11
11.3.8. Alarm A9: Commutation Error ---------- 11-12
11.3.9. Warning C0: Position Command/Feedback Signal Error ---------- 11-13
11.3.10. Alarm C3: CPU Error ---------- 11-13
11.3.11. Alarm E0: RAM Error ---------- 11-14
11.3.12. Alarm E2: ROM Error ---------- 11-14
11.3.13. Alarm E7: System Error ---------- 11-15
11.3.14. Alarm E8: Interface Error ---------- 11-15
11.3.15. Alarm E9: ADC Error ---------- 11-15
11.3.16. Warning F1: Excess Position Error ----- 11-16
11.3.17. Over Travel F2: Software Over Travel Limit ---------- 11-17
11.3.18. Over Travel F3: hardware Over Travel Limit ---------- 11-18
11.3.19. Alarm F4: Emergency Stop ---------- 11-19
11.3.20. Warning F5: Program Error ---------- 11-19
11.3.21. Warning F8: Automatic Tuning Error -- 11-20
11.3.22. Warning P0: Over Heat ---------- 11-21
11.3.23. Alarm P1: Main Power Overvoltage ---- 11-21
11.3.24. Alarm P2: Motor Over Current ---------- 11-22
11.3.25. Alarm P3: Control Power Under Voltage 11-22
11.3.26. Warning P5: Main Power Under Voltage 11-23
11.3.27. Alarm P9: Power Module Alarm -------- 11-23

12. Troubleshooting ---------- 12-1
12.1. Identifying Problem ---------- 12-1
12.2. Troubleshooting ---------- 12-1
12.2.1. Power Trouble ---------- 12-2
12.2.2. Motor Trouble ---------- 12-2
12.2.3. Vibration, Abnormal Noise or Unstable Settling ---------- 12-3
12.2.4. Improper Positioning ---------- 12-3
12.2.5. RS-232C Communication Problem -------- 12-4

Appendix

Appendix 1: How to Monitor Input and Output Signal 1
Appendix 2: How to Check Motor Condition 6
Appendix 3: How to Back up and Restore the Settings of Programs and Parameters 10
Appendix 4: Handling of Saved Data in MegaTerm 18
Appendix 5: Procedure for Replacing Driver Unit Model EDD 20
Appendix 6: Regeneration Resistor 22
Appendix 7: Wiring of RS-232C Communication Cable 24
Appendix 8: USB Communication Cable 25
Appendix 9: Setting List of Parameter and Program of Driver Unit Model EDD 26

1. Introduction

- This is the operation manual of the Megatorque Motor System with the Driver Unit Model EDD. Please refer to “2.4. Standard Combination List” for the applicable Megatorque Motor System.
- Before operating the Megatorque Motor System for the first time, this manual should be read thoroughly.
- We describe the standard Motors only in “2.5. Motor Specifications.” If your Motor is not one of these, please refer to the attached specification document.

1.1. Notes to Users

1.1.1. Notes for Safety

- For your safety, you should read this manual thoroughly and understand the contents before operating the Megatorque Motor System.

- The following notices are added to give particular emphasis on the safety precautions in this manual.

⚠ *Danger : A matter that might cause serious injuries.*

⚠ *Warning : A matter that might result in injuries.*

⚠ *Caution : A matter that might result in the breakdown of equipment into which the Motor is installed or the break down of the mechanism surrounding the Motor.*

1.1.2. Precautions for Use

- Pay special attention to the following when installing, checking and troubleshooting the Megatorque Motor System.

⚠ *Caution : When making a combination of a Motor and a Driver Unit, confirm that their specifications for Motor size and maximum Motor torque match each other.*

  - This is because the Driver Unit holds the unique parameter settings for a matching Motor.
  - Refer to "2.4.Standard Combination List" for the combination.
  - Make sure that the reference numbers on each identification plate of a Motor and a Driver Unit indicate the same coding for Motor size, Motor maximum torque and position sensor.
  - If the reference numbers are not matched, the Motor may lose its accuracy and emit noise, and furthermore, it may not move or lose its control.

⚠ *Caution : Do not cut the Cable Set, or do not hook it up to other cable.*

  - The modification of the Cable Set may worsen the Motor and Driver Unit performances, typically positioning accuracy and repeatability of the resolver.

⚠ *Caution : Never disassemble the Motor because it has been precisely assembled and tuned.*

  - If disassembled, it may cause abnormalities such as deterioration in rigidity and positioning accuracy, and generation of noise.

⚠ *Caution : Be sure to connect protective ground of the Driver unit Model EDD.*

  - Failure to do so may cause an electric shock.

⚠ *Danger : Be sure to connect the Emergency Stop signal circuit to the EMST port of the CN2 control I/O connector.*

  - Please set the System so that you can immediately stop the Motor in case of an emergency.

⚠ *Caution : Do not remove the panel of the Driver Unit so as not to cause an electric shock. It is extremely dangerous due to high voltage present.*

  - Driver Units have high capacity electrolytic capacitors in its internal circuits, and thus resulting in high residual voltage of the capacitors for few minutes after the main power is turned off.

⚠ *Caution : Use of an optional regeneration resistor shall be considered for a heavy-duty operation.*

- The Megatorque Motors regenerate when they decelerate carrying heavy load inertia.
- An internal capacitor charges the Motor regeneration. However, when high and continuous regeneration exceeding its capacity is applied, excess energy activates an alarm "Alarm P1: Abnormal main power voltage" and the Motor stops. In such a case, you need to lower operating conditions (velocity, deceleration rate, and operation duty cycle), or you require an external high capacity regeneration resistor.

⚠ *Danger : Never apply water or oil to the Driver Unit.*

- Take appropriate measures to protect the Driver Unit from water, oil, slag, dust, and corrosive gas.

Figure 1-1: Outline of Driver Unit Model EDD

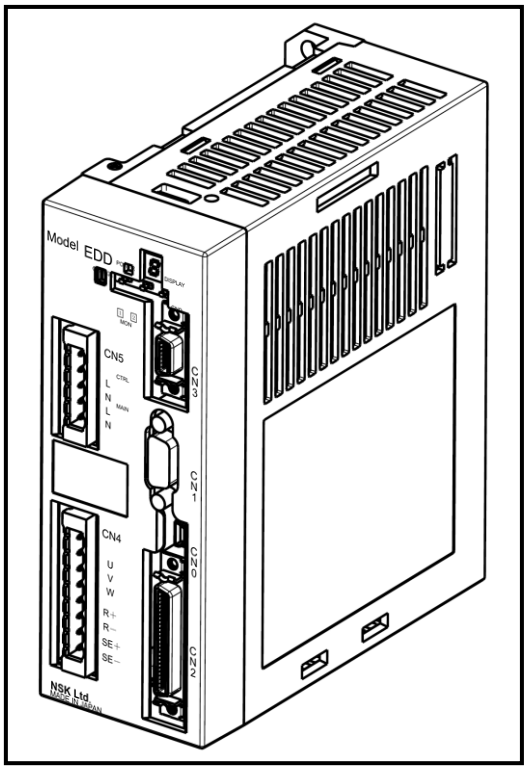

⚠ *Warning : Do not test the insulation of the Driver Unit.*

- The high voltage used in the test may destroy the internal circuits of Driver Unit.

⚠ *Caution : In most cases, the Direct Drive Motor System cannot exhibit its full performance unless the shipping set of the parameters is altered for actual applications.*

- Refer to "5. Tuning" and be sure to set the servo parameters to actual use conditions.

⚠ *Caution : Allowable moment load and axial load depend on Motor size. Please confirm that actual load conditions are in the limits of the Motor.*

- Refer to "2.5. Motor Specifications" for the allowable moment load, axial load and radial load.

⚠ *Caution : An excessive eccentric load or an excessive load may cause the permanent deformation of the rotor or premature failure of the bearing inside the Motor. When handling the Motor, please pay special attention not to drop it and not to give a shock to it. Protect the Motor from a collision with an obstacle.*

- Excessive load to the Motor may damage the bearing of Motor and may mechanically lock the Motor.
- The flatness of the Motor mounting surface shall be 0.02 mm or less.

⚠ *Caution : For an oscillating operation less than 45 [°], turn the Motor 90 [°] or more at least once a day.*

⚠ *Caution : Do not give a direct impact to the Motor with a hammer or the like. A direct impact to the outside of the Motor or the load fixed to the Motor may deteriorate accuracy of the built-in position sensor.*

⚠ *Caution : When attaching a rotary machine component to the Motor such as a bearing or a ball screw, be sure to align both centers within 0.01 mm. Excessive eccentric load or excessive load to the Motor may cause the premature failure of Motor's bearing.*

⚠ *Danger : As the Motor may become hot depending on your use conditions, handle it in a sufficiantly cold state, and be careful of burns, etc.*

⚠ *Danger : The Motor has a rotational part and a stationary part. Be careful not to be caught in the rotational part, including the parts that you install.*

⚠ *Warning : Be sure not to activate the dynamic brake in the following conditions. Otherwise the dynamic brake circuit may break and the Motor will enter in a "free run" state, leading to possible injuries.*

- Do not activate the dynamic brake in normal operations. Stop the Motor by a control command, not by the dynamic brake. The dynamic brake is an auxiliary function to stop the Motor immediately in an emergency. In the middle of operation, an alarm, a warning or the "Emergency stop" input activates the dynamic brake.
  Warnings that initiate "Servo-off" state are "A3" (Software thermal), "C0" (Position command/Feedback error), "F5" (Program error), and "F8" (Automatic tuning error).
- The load moment of inertia to a Motor must be within the range of the recommended load moment of inertia described in "2.5 Motor Specifications." In case of an indexing operation, a position command shall be 360 degrees or less, while the maximum speed for continual rotation must be 0.5 [s^{-1}] or less. (However, there may be a possibility to exceed the above limits in some cases. Please consult NSK when you require a close investigation on the limits.)
- For the PN4180 Motor, be sure to stop the Motor for 20 minutes or longer when you stop it by the dynamic brake.

⚠ *Caution : When the Motor is continually accelerating a high inertial load with high acceleration, the system constantly outputs a high torque exceeding the rated torque, and thus likely to activate the warning "A3" (Software thermal). In such a case take a remedy to decrease the load moment of inertia or to lower the speed.*

1.1.3. Interchangeability of Motor and Driver Unit

Interchangeable types

- The standard Motors and the Driver Units Model EDD can be randomly matched (interchangeable). Therefore, you may have a combination of a Motor and a Driver Unit that have the different serial number.

- However, please refer to “2.4. Standard Combination List” for combination of reference numbers of the Motors, the Driver Units and the Cable Sets.

Non-interchangeable types

- The interchangeability of the Motors and the Driver Units won’t be applicable for a Megatorque Motor System that is made to a special order. In such a case please refer to respective specification documents.

- Be sure to make a combination of a Motor and a Driver Unit with the same serial number when they are not interchangeable. Moreover, you must use the specified Cable Set.

- Please be aware that the Megatorque Motor System won’t fully exhibit its performance as described in its specifications if a Motor and a Driver Unit are matched with different serial number, or if you change the length of the Cable Set. Especially in case of a System that incorporates an absolute position sensor, you may lose positioning repeatability of the Home position.

1.2. Terminology

◆ It is necessary to be familiar with some terms used in this document.

- Cable Set ---------- A cable set exclusive use for the Megatorque Motor System. Connects driver Unit and Megatorque Motor
- CCW ---------- Counterclockwise; direction of Motor rotation. Seen from the top of rotor.
- closed ---------- Logic output state; output current will flow.
- count/rev. ---------- Count/revolution. A unit of resolution. In some cases, it is described as pulse/rev. in this manual.
- CW ---------- Clockwise; direction of Motor rotation. Seen from the top of rotor.
- Driver Unit ---------- Means Megatorque Motor System's driver unit when capitalized.
- Handy Terminal ------ Means an optional handy terminal (FHT31) for RS-232C communication used for parameter settings and programming, etc. Exclusive use for Megatorque Motor System. .
- LO ---------- A parameter to set a load inertia moment to the Motor. Unit is in [kg•m^2].
- Motor ---------- Means Megatorque Motor System's motor when capitalized.
- velocity gain (VG) --- Shorter name for velocity loop proportional gain. The velocity error, the deviation of velocity feedback from the velocity command, will be amplified by a number defined as a velocity gain set by the parameter VG, and will be output as a torque command.
- + (plus) direction The direction in which the position data inside the Driver Unit counts up.
- - (minus) direction The direction in which the position data inside the Driver Unit counts down.

◆ The following commands are used for the Driver Unit to set function and to execute operation.

- Command ---------- Execution instruction to the Driver Unit. It includes the command RUN to start positioning operation and stop commands to stop positioning operation.
- Parameter ---------- The parameters hold the operational settings of internal function of the Driver Unit. Changing of these settings enables to move the Motor as planed
  - ◊ Global parameter-----A parameter set to a command line in program channels. This term is used to distinguish them from local parameters. It is stored in a non-volatile memory.
  - ◊ Local parameter------A parameter that is temporarily becomes effective in a program operation. It is not stored to a non-volatile memory.
- Monitor ---------- A monitor can output data showing the internal state of the Driver Unit, such as Motor velocity and position scale data. You can monitor them anytime.

2. Specifications

2.1. System Configuration

2.1.1. Control Mode

- The Driver Unit Model EDD is compatible with 45 types of interface devices, and is capable of the operations described in "Table 2-1: Applicable interface and control mode."

Table 2-1: Applicable interface and control mode

Applicable interface	Control mode	Controllers/Interfacing devices	Application
General Input/Output	<Program operation> • Positioning commands are programmed and stored to the Driver Unit. • Performs a positioning by the inputs of channel selection and the program starting command. • The commands are in the absolute or incremental position format. <Jogging operation> • The Motor rotates to any point by the Jog input and the Jog direction input. <Home Return operation> • Set a current position to the Home position or set the Home position by Home Return operation started by the Home position limit input. • An input of starting Home Return signal executes the operation.	• PLC (Input/Output unit) • NC controller (Provided with Inputs/Outputs of M function)	• Various types of indexing application • Intermittent positioning control
Pulse train input	<Pulse train command positioning operation> • Number of input pulses governs the positioning operation.	• PLC (Positioning control unit) • Position controller (Pulse output)	
RS-232C communication	<RS-232C communication operation> • The master controller outputs directly the positioning command. <Program operation> • Program start command starts positioning operation. <Jogging operation> • The Jog operation command moves the Motor to any point. <Home Return operation> Executes Home Return operation by the start command of Home Return. <Velocity/torque command operation> • Executes Velocity/torque command operation by the command DC.	• PLC (Serial communication unit) • RS-232C communication terminal (Handy Terminal, etc.)	• Various types of indexing application • Intermittent positioning control • Constant velocity operation • Tension control
USB communication	<USB communication operation>*1 • The master controller outputs directly the positioning command. <Program operation>*1 • Positioning operation is controlled by the program start command. <Jogging operation>*1 • The Motor rotates to any point by the Jog operation command. <Home Return operation>*1 • Input of the start command of Home Return operation executes the operation. <Velocity/torque command operation>*1 • Executes Velocity/torque command operation by the command DC.	• PC (EDD MEGATERM)	
Analog input	<Analog input> • Velocity/torque operation according to input voltage	• PLC (Analog voltage unit)	• Constant velocity operation • Tension control

PLC: Programmable Logic Controller

*1. Please do not use it for normal operation but for trial operation only such as tuning.

2.1.2. Examples of System Configuration

Fig 2-1: System configuration for program operation

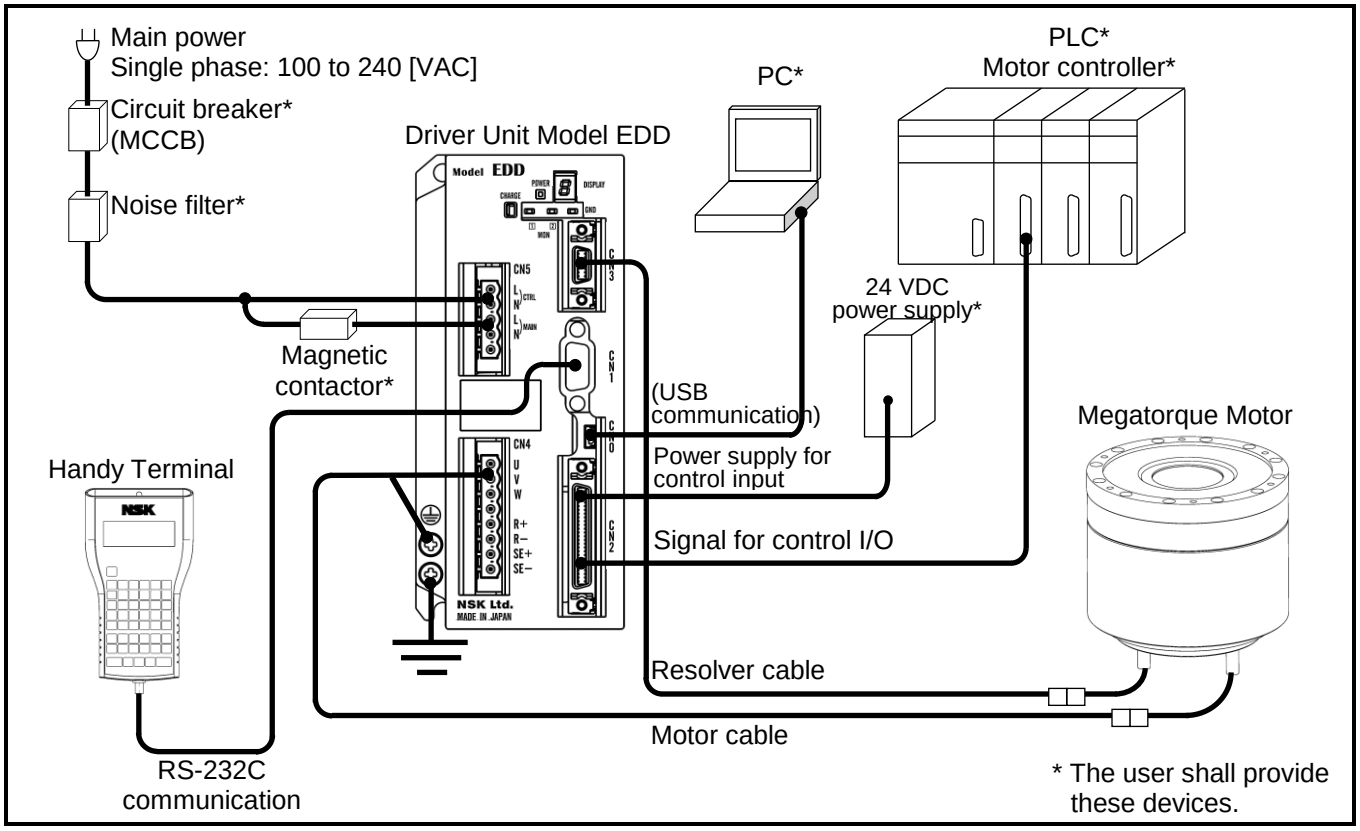

Fig 2-2: System configuration for pulse train operation and analog input operation

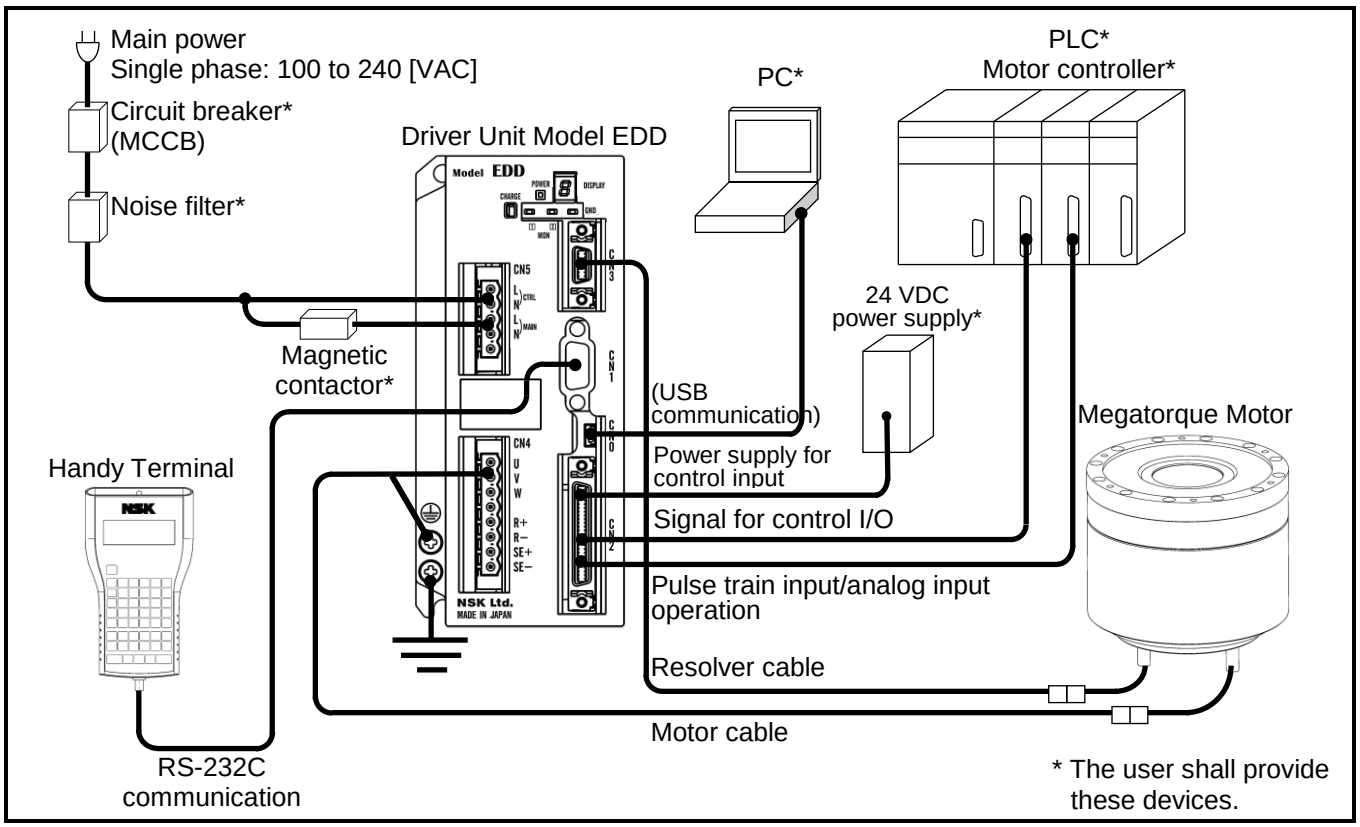

Fig 2-3: System configuration for RS-232C serial communication command positioning

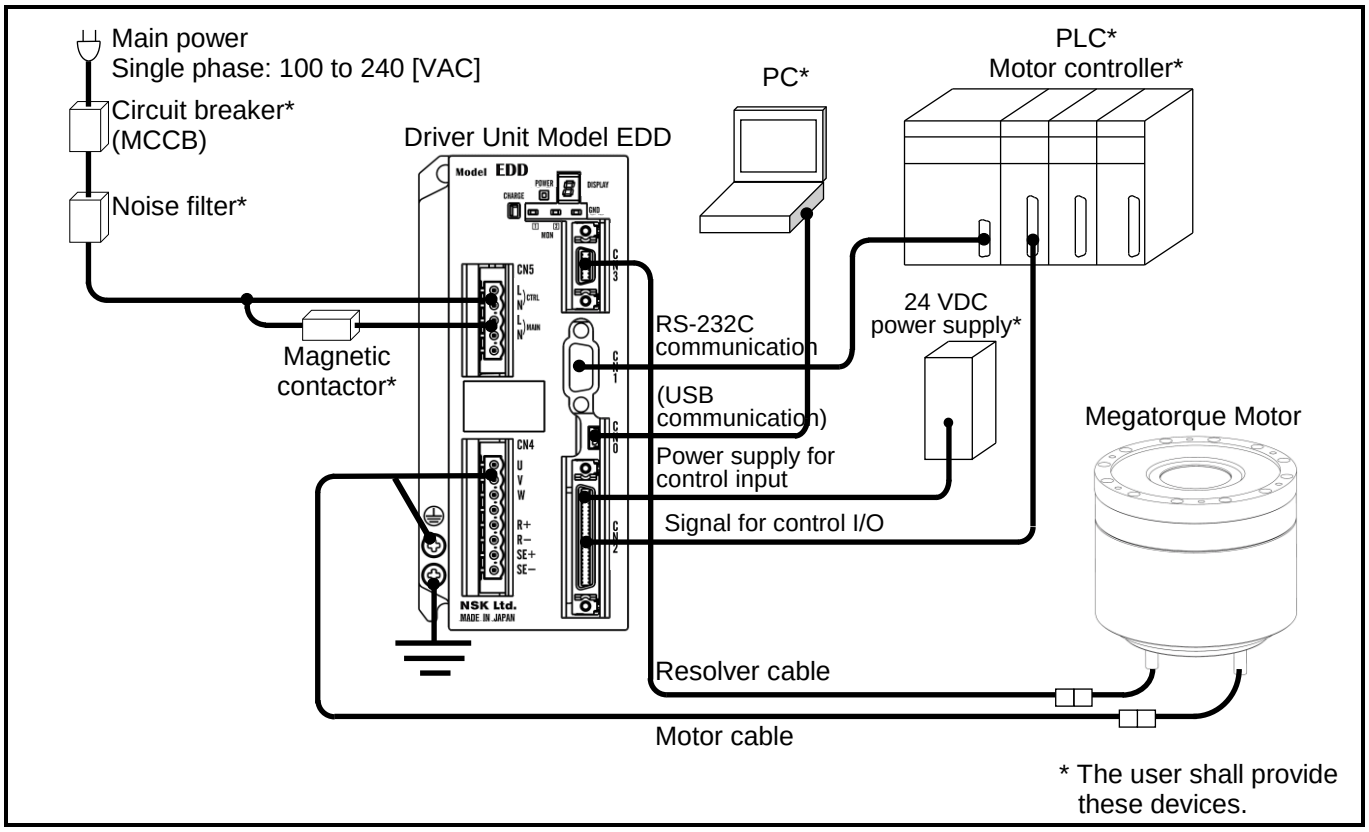

2.2. Reference Number and Coding

2.2.1. Mega torque Motor

Fig 2-4: Reference number coding of Mega torque Motor

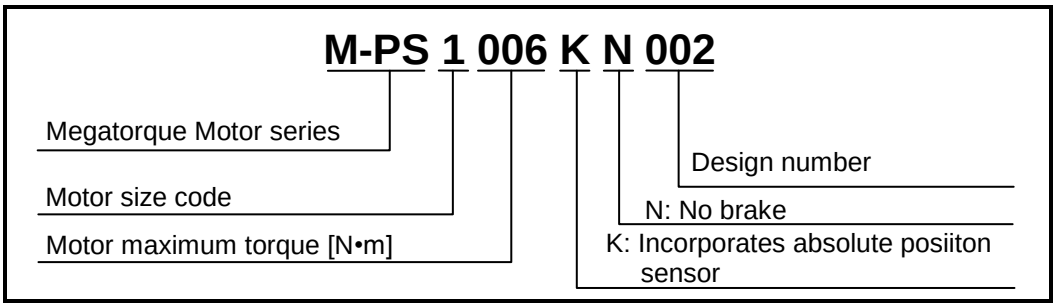

2.2.2. Driver Unit Model EDD

Fig 2-5: Reference number coding of Driver Unit Model EDD

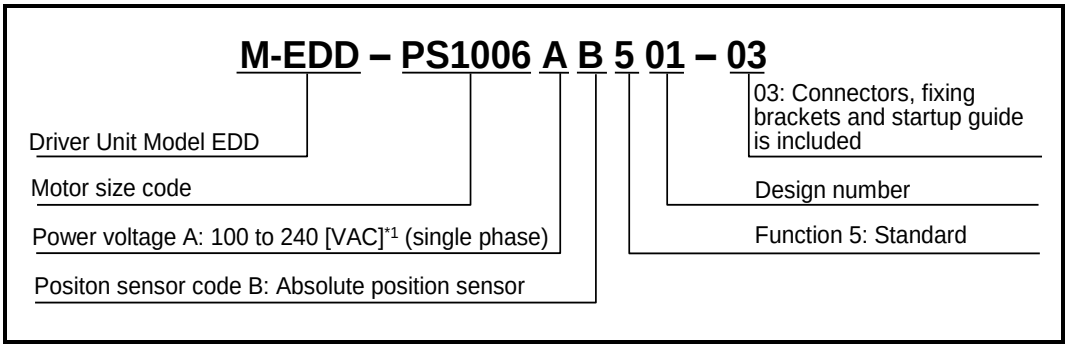

*1. For compatible Motors PN 4135, PN 4180 and PX 3050, the power voltage is 200 to 240 [VAC] (single phase).

2.2.3. Cable Set

Fig 2-6: Reference number coding of Cable Set

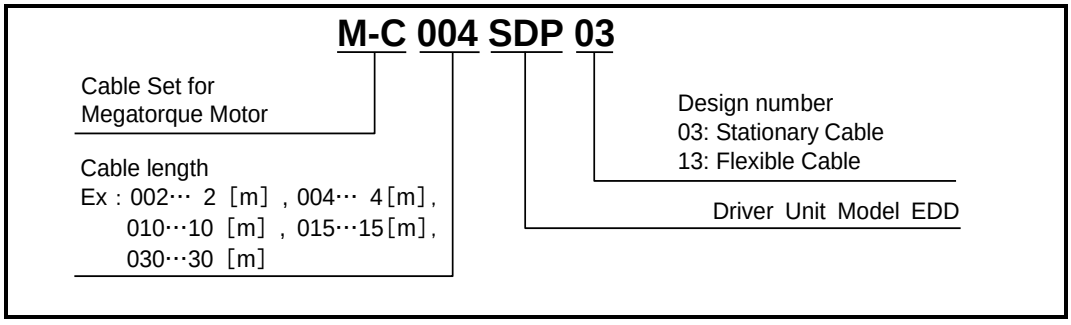

2.2.4. Handy Terminal

Fig 2-7: Reference number coding of Handy Terminal

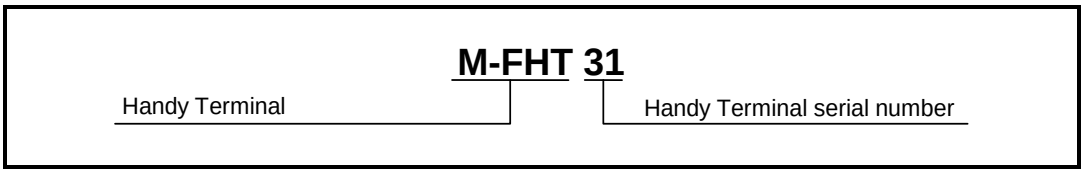

2.3. Name of Each Part

2.3.1. Mega torque Motor

2.3.1.1. PS Series

Fig 2-8: PS series Megatorque Motor

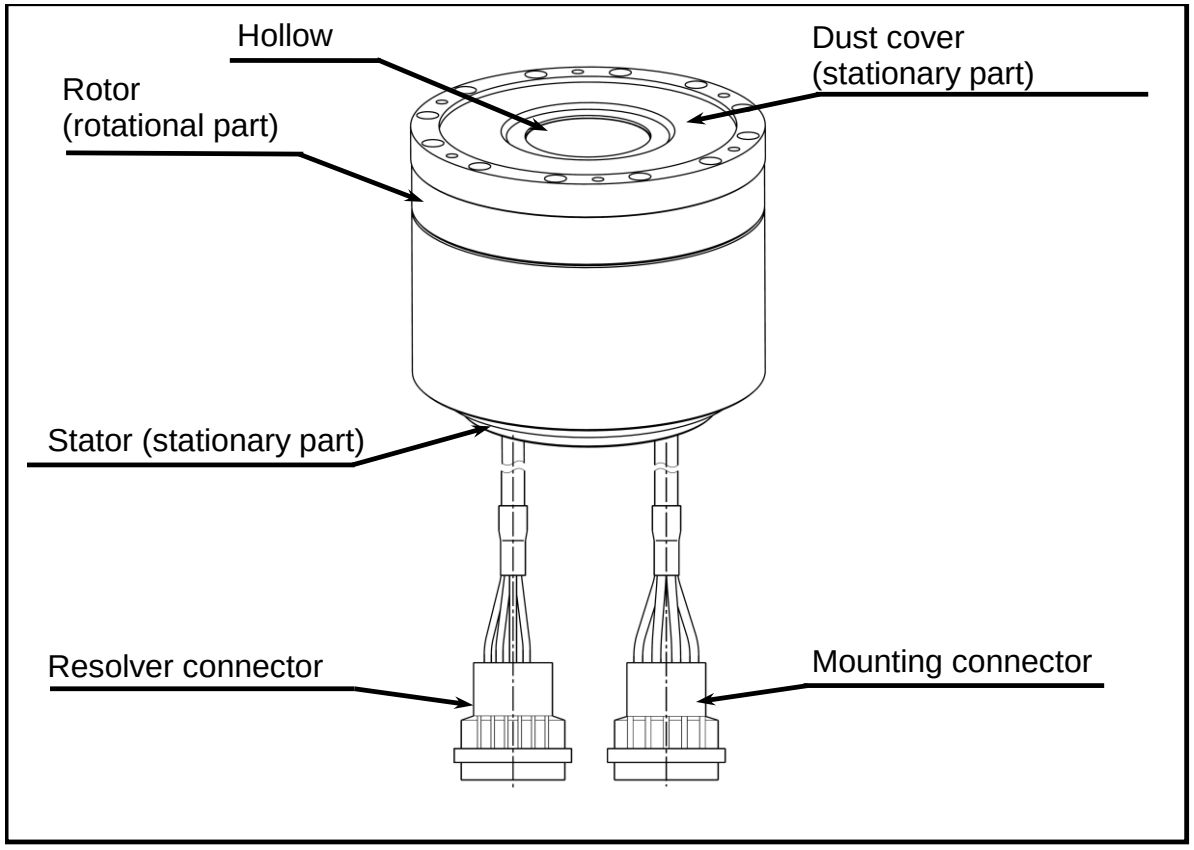

2.3.1.2. PN Series

Fig 2-9: PN2012 Motor

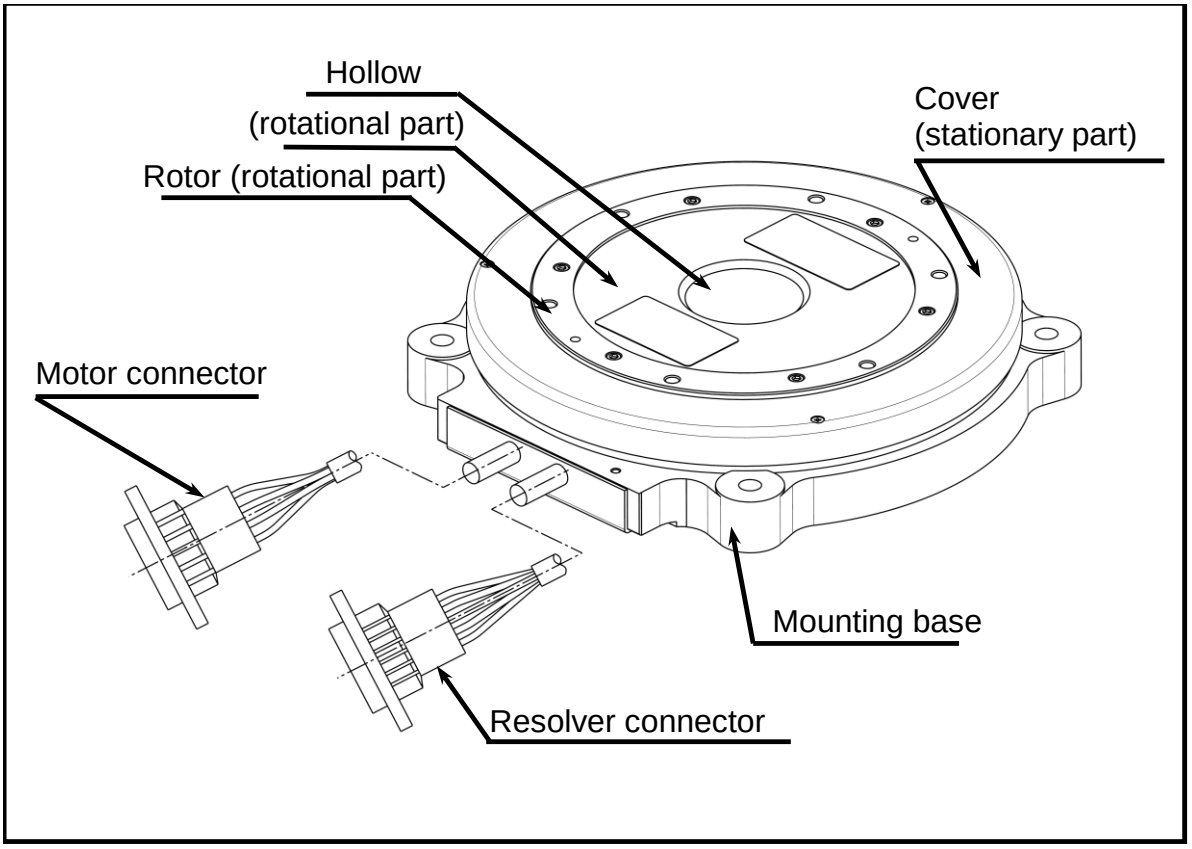

Fig 2-10: PN3045, PN4135 and PN4180 Motors

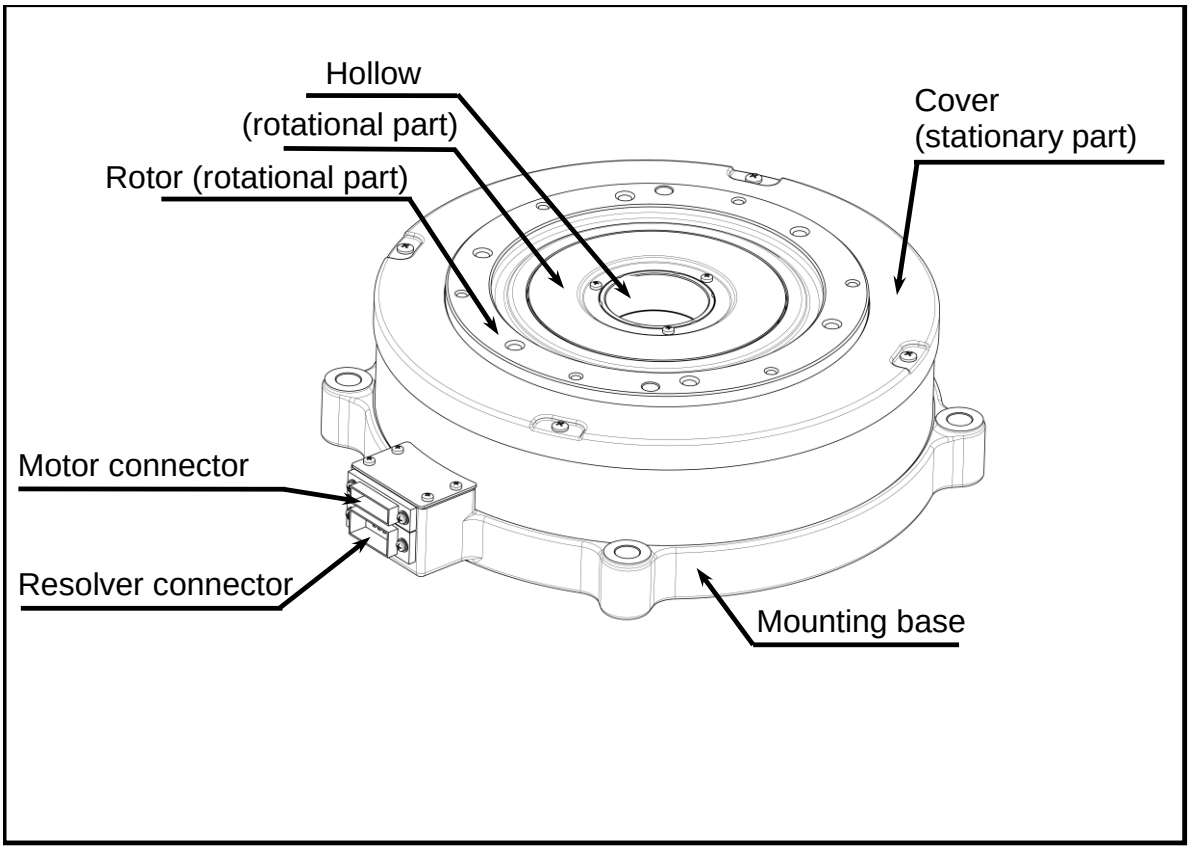

2.3.1.3. PX Series

Fig 2-11: PX3050 Motor

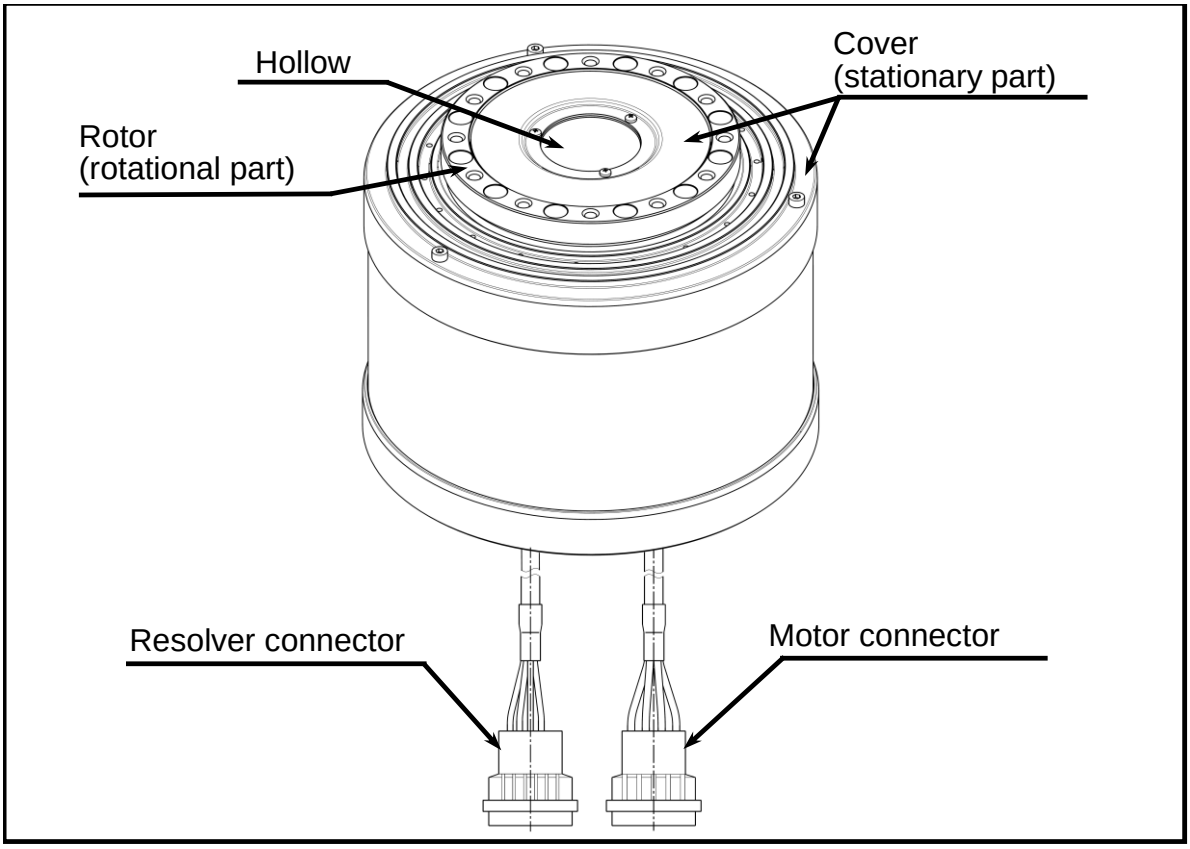

2.3.2. Driver Unit Model EDD

Fig 2-12: Driver Unit Model EDD (standard)

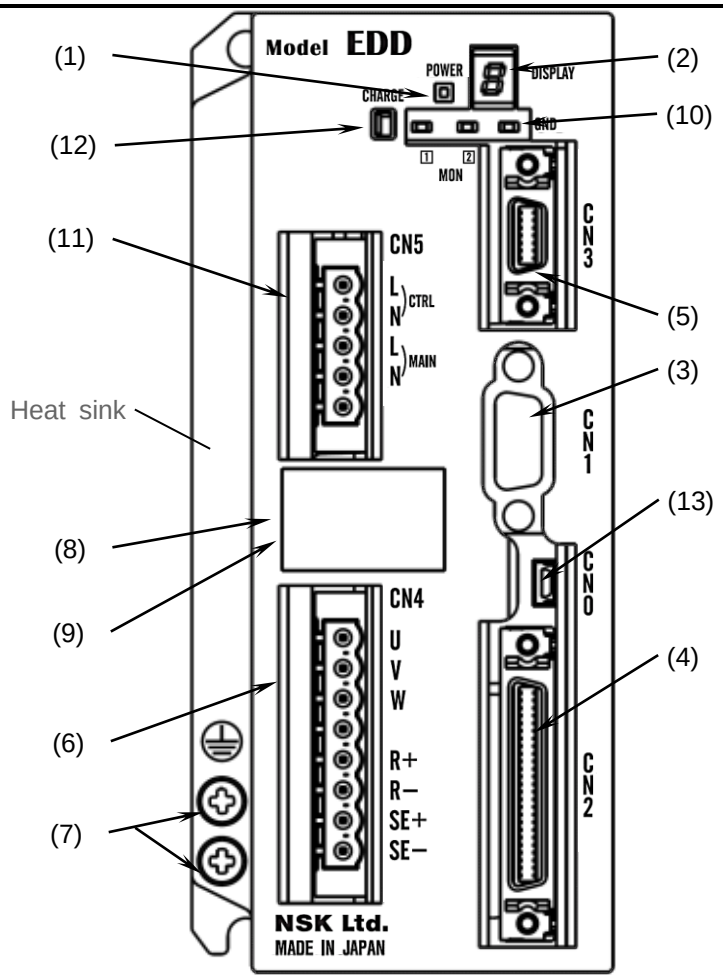

(1) Power LED

(2) 7 segments LED

(3) CN1 (9 pins)
RS-232C serial communication cable connector
Connect the optional Handy Terminal FHT31.

(4) CN2 (50 pins)
Motor control signal Input/Output (I/O) connector

(5) CN3 (14 pins)
Resolver cable connector
Connect the exclusive resolver cable.

(6) CN4
Motor cable connector
Connect the exclusive Motor cable.

(7) Ground terminal
M4 screws

(8) Type
Reference number plate

(9) No.
Serial number plate

(10) Monitor terminal

(11) CN5
Connector for main power

(12) Power amplifier charge indicator
Indicates that the capacitor of the power amplifier still charges residual voltage.

(13) CN0
USB connector
For communication with PC

2.3.3. Handy Terminal

Fig 2-13: Handy Terminal M-FHT31

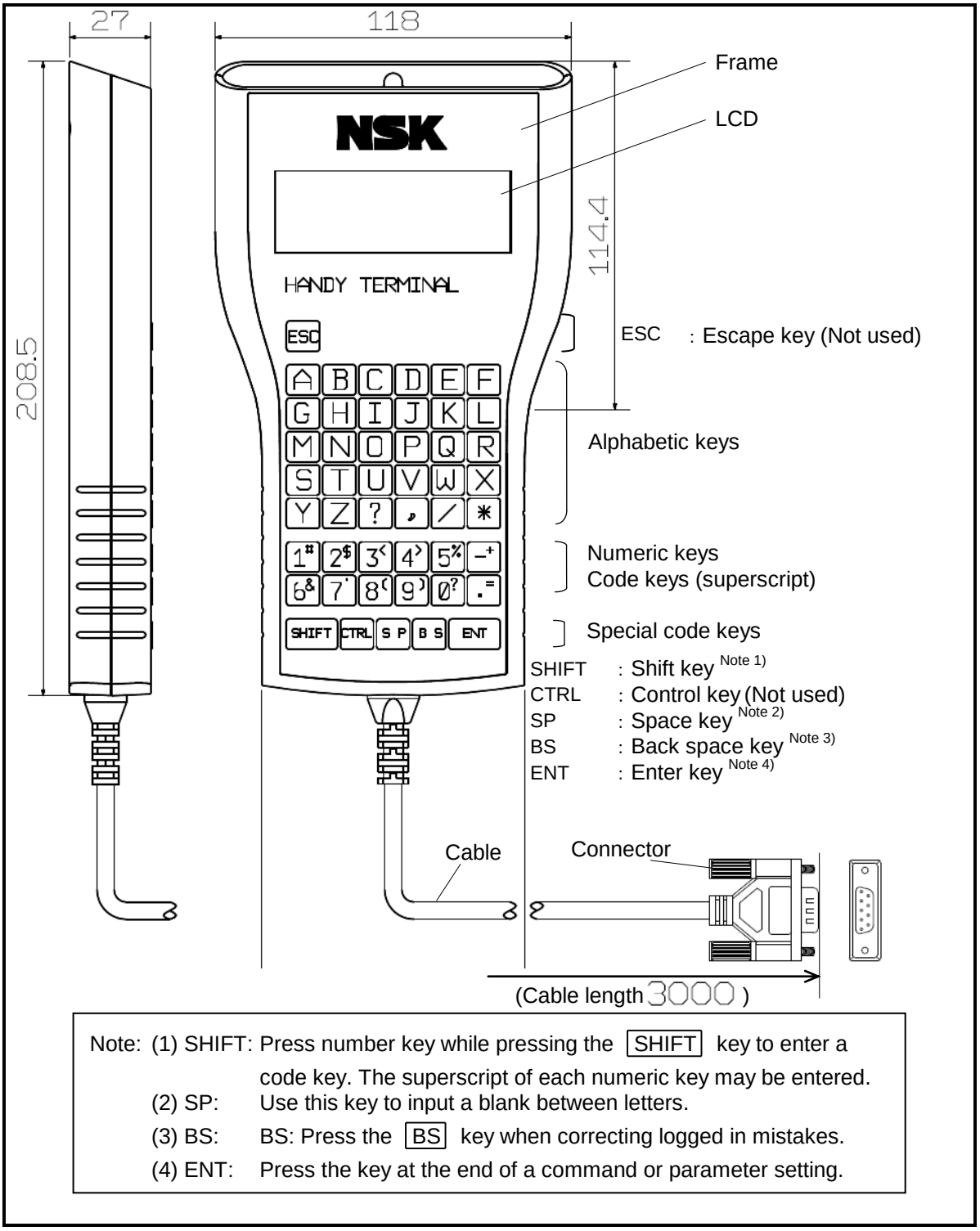

Note: (1) SHIFT: Press number key while pressing the [SHIFT] key to enter a code key. The superscript of each numeric key may be entered.
(2) SP: Use this key to input a blank between letters.
(3) BS: BS: Press the [BS] key when correcting logged in mistakes.
(4) ENT: Press the key at the end of a command or parameter setting.

2.4. Standard Combination List

2.4.1. Motor and Driver Unit Model EDD Combinations

Table 2-2: Motor and Driver Unit Model EDD Combinations

Motor diameter	Motor reference number	Driver Unit Reference number ∗∗ : code for specification of included items.	Power voltage[VAC]	Cable reference number	Remarks
ø100	M-PS1004KN510	M- EDD-PS1004AB501-∗∗	100 to 240	M-C0∗∗SDP03 (Fixed type cable) M-C0∗∗SDP13 (Flexible type cable) ∗∗: Cable length 01: 1 [m] 02: 2 [m] 03. 3 [m] 04: 4 [m] 05: 5 [m] 06: 6 [m] 08: 8 [m] 10: 10 [m] 15: 15 [m] 20: 20 [m] 30: 30 [m]	• 256 channels for internal program. • Pulse train input (Photo coupler) • Analog input
	M-PS1006KN002	M- EDD-PS1006AB501-∗∗			
	M-PS1012KN002	M- EDD-PS1012AB501-∗∗			
	M-PS1018KN002	M- EDD-PS1018AB501-∗∗			
ø150	M-PS3015KN002	M- EDD-PS3015AB501-∗∗			
	M-PS3030KN002	M- EDD-PS3030AB501-∗∗			
	M-PS3060KN002	M- EDD-PS3060AB501-∗∗			
	M-PS3090KN002	M- EDD-PS3090AB501-∗∗			
ø170	M-PN2012KN201	M- EDD-PN2012AB501-∗∗			
ø210	M-PN3045KN001	M- EDD-PN3045AB501-∗∗			
ø160	M-PX3050KN502	M- EDD-PX3050AB501-∗∗	200 to 240		
ø280	M-PN4135KN001	M- EDD-PN4135AB501-∗∗			
	M-PN4180KN001	M- EDD-PN4180AB501-∗∗			

* The PN2012 and PX3050 Motors are compatible with cable lengths up to 8 [m].

2.4.2. Cable Set

Table 2-3: Reference Number of Cable Set

Function	Cable length [m]	Cable set reference number
Stationary cable	1	M-C001SDP03
	2	M-C002SDP03
	3	M-C003SDP03
	4	M-C004SDP03
	5	M-C005SDP03
	6	M-C006SDP03
	8	M-C008SDP03
	10	M-C010SDP03
	15	M-C015SDP03
	20	M-C020SDP03
	30	M-C030SDP03
Flexible cable	1	M-C001SDP13
	2	M-C002SDP13
	3	M-C003SDP13
	4	M-C004SDP13
	5	M-C005SDP13
	6	M-C006SDP13
	8	M-C008SDP13
	10	M-C010SDP13
	15	M-C015SDP13
	20	M-C020SDP13
	30	M-C030SDP13

* The mass of the stationary cable 4 m (M-C004SDP03) is 0.85 kg.
* The mass of the flexible cable 4 m (M-C004SDP13) is 0.85 kg.

2.4.3. Handy Terminal (For parameter and program input)

- Handy Terminal is required for inputting parameters and programs.

Table 2-4: Reference number of Handy Terminal

Handy Terminal reference number
M-FHT31

2.5. Motor Specifications

2.5.1. PS Series

Table 2-5: Specifications of PS1 Motor

Item [Unit] \ Reference number		M-PS1004KN510	M-PS1006KN002	M-PS1012KN002	M-PS1018KN002
Motor outside diameter	[mm]	ø 100			
Maximum output torque*1	[N•m]	3 / 2	6 / 6	12 / 12	18 / 18
Rated output torque*1	[N•m]	1 / 1	2 / 2	4 / 3	6 / 6
Motor height	[mm]	63	85	110	135
Hollow diameter	[mm]	ø 35			
Maximum rotational speed*1	[s^{-1}]	3 / 3	10 / 5	10 / 4	10 / 4
Rated rotational speed*1	[s^{-1}]	1 / 1	5 / 3	5 / 3	5 / 2
Resolution of position sensor	[count/ revolution]	2 621 440			
Absolute positioning accuracy	[arc-sec]	60*2, *3			
Repeatability	[arc-sec]	± 2			
Allowable axial load	[N]	1 000*4			
Allowable radial load	[N]	820*5			
Allowable moment load	[N•m]	20	28		
Rotor inertia	[$kg•m^2$]	0.0023	0.0024	0.0031	0.0038
Allowable range of inertia	[$kg•m^2$]	0.15 to 0.23	0.0015～0.24	0.03～0.31	0.03～0.38
Mass	[kg]	2.42	2.4	3.5	4.5
Environmental conditions		Ambient temperature: 0 to 40[[°C]]. Humidity: 20 to 80[%]. Indoor use only. Free from condensation, dust and corrosive gas. (IP30 equivalent.)			

Table 2-6: Specifications of PS3 Motor

Items [Unit] \ Reference number		M-PS3015KN002	M-PS3030KN002	M-PS3060KN002	M-PS3090KN002
Motor outside diameter	[mm]	ø 150			
Maximum output torque*1	[N•m]	15 / 15	30 / 30	60 / 60	90 / 90
Rated output torque*1	[N•m]	5 / 5	10 / 10	20 / 20	30 / 30
Motor height	[mm]	85	102	136	170
Hollow diameter	[mm]	ø 56			
Maximum rotational speed*1	[s^{-1}]	10 / 4	10 / 3	8 / 2.5	5 / 1.5
Rated rotational speed*1	[s^{-1}]	5 / 3	5 / 2	1 / 1	1 / 1
Resolution of position sensor	[count/ revolution]	2 621 440			
Absolute positioning accuracy	[arc-sec]	60*2, *3			
Repeatability	[arc-sec]	± 2			
Allowable axial load	[N]	2 000*4			
Allowable radial load	[N]	1 700*5			
Allowable moment load	[N•m]	42			
Rotor inertia	[$kg•m^2$]	0.011	0.014	0.019	0.024
Allowable range of inertia	[$kg•m^2$]	0～1.1	0～1.4	0.12～1.9	0.12～2.4
Mass	[kg]	5.5	6.9	11.0	13.8
Environmental conditions		Ambient temperature: 0 to 40[[°C]]. Humidity: 20 to 80[%]. Indoor use only. Free from condensation, dust and corrosive gas. (IP30 equivalent.)			

*1. The displayed numerical values are a combination with the Driver Unit power voltage 200 [VAC] / 100 [VAC].
*2. Accuracy at an ambient temperature of 25 ± 5 [°C].
*3. 90 [sec] when the cable length exceeds 8 [m].
*4. When the radial load is 0 [N].
*5. When the axial load is 0 [N].

2.5.2. PN Series

Table 2-7: Specifications of PN Motor

Item [Unit] \ Reference number		M-PN2012KN201	M-PN3045KN001	M-PN4135KN001	M-PN4180KN001
Motor outside diameter	[mm]	ø 170	ø 210	ø 280	
Maximum output torque*1	[N•m]	12 / 10	45 / 45	135 / -	180 / -
Rated output torque*1	[N•m]	2 / 2	15 / 15	45 / -	60 / -
Motor height	[mm]	35	85	95	112
Hollow diameter	[mm]	ø 36	ø 56	ø 50	
Maximum rotational speed*1	[s^{-1}]	2 / 2	3 / 1.5	3 / -	3 / -
Rated rotational speed*1	[s^{-1}]	1 / 1	1 / 1	1 / -	1 / -
Resolution of position sensor	[count/ revolution]	2 621 440			
Absolute positioning accuracy	[arc-sec]	90*2, *3	60*2, *4		
Repeatability	[arc-sec]	± 2			
Allowable axial load	[N]	1 000*5	4500*5	9500*5	
Allowable radial load	[N]	300*6	4500*6	9500*6	
Allowable moment load	[N•m]	20	80	160	200
Rotor inertia	[kg•m^2]	0.0024	0.011	0.057	0.065
Recommended range of inertia	[kg•m^2]	0.02 to 0.24	0.11 to 0.77	0.57 to 3.99	0.65 to 4.55
Mass	[kg]	3.7	13	26	31
Environmental conditions		Ambient temperature: 0 to 40[°C]. Humidity: 20 to 80[%]. Indoor use only. Free from condensation, dust and corrosive gas. (IP30 equivalent.)			

2.5.3. PX Series

Table 2-8: Specifications of PX Motor

Item [Unit] \ Reference number		M-PX3050KN502
Motor outside diameter	[mm]	ø 160
Maximum output torque*1	[N•m]	50 / -
Rated output torque*1	[N•m]	14 / -
Motor height	[mm]	130
Hollow diameter	[mm]	35
Maximum rotational speed*1	[s^{-1}]	10 / -
Rated rotational speed*1	[s^{-1}]	4 / -
Resolution of position sensor	[count/ revolution]	2 621 440
Absolute positioning accuracy	[arc-sec]	60*2, *3
Repeatability	[arc-sec]	± 2
Allowable axial load	[N]	1 000*5
Allowable radial load	[N]	820*6
Allowable moment load	[N•m]	28
Rotor inertia	[kg•m^2]	0.0028
Recommended range of inertia	[kg•m^2]	0.003 to 0.28
Mass	[kg]	9.5
Environmental conditions		Ambient temperature: 0 to 40[°C]. Humidity: 20 to 80[%]. Indoor use only. Free from condensation, dust and corrosive gas. (IP30 equivalent.)

*1. The displayed numerical values are a combination with the Driver Unit power voltage 200 [VAC] / 100 [VAC]. PN4 and PX3 correspond only to 200 [VAC].
*2. Accuracy at an ambient temperature of 25 ± 10 [℃].
*3. The cable length of PN2012 and PX3050 is up to 8 [m].
*4. 90 [sec] when the cable length exceeds 8 [m].
*5. When the radial load is 0 [N].
*6. When the axial load is 0 [N].

2.5.4. Axial Load and Moment Load

⚠ *Caution : • Axial load Fa shall be less than to the allowance limits load.*

• Radial load Fr shall be less than to the allowance limits load.

• Moment load M shall be less than to the allowance limits load.

Fig 2-14: Load applied to a Motor

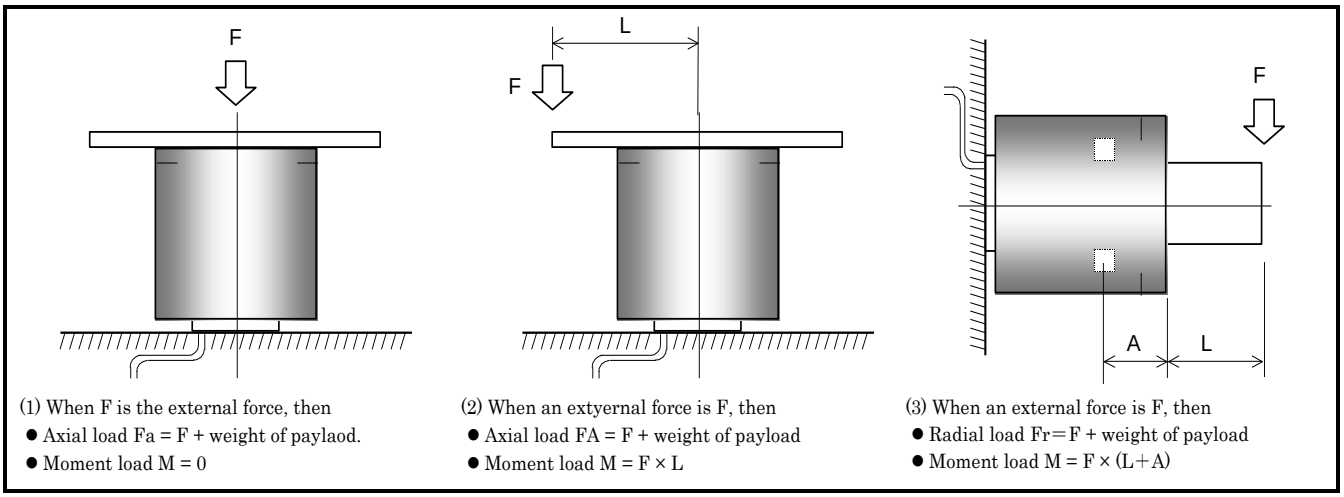

(1) When F is the external force, then
- Axial load Fa = F + weight of paylaod.
- Moment load M = 0

(2) When an extyernal force is F, then
- Axial load FA = F + weight of payload
- Moment load M = F × L

(3) When an external force is F, then
- Radial load Fr = F + weight of payload
- Moment load M = F × (L+A)

Table 2-9: Dimension A (Distance between the bearing and the rotor surface)

Motor reference number	M-PS1004KN510	M-PS1006KN002 M-PS1012KN002 M-PS1018KN002	M-PS3015KN002 M-PS3030KN002 M-PS3060KN002 M-PS3090KN002
Dimension A	28.6	30.2	32.9

Table 2-10: Dimension A (Distance between the bearing and the rotor surface)

Motor reference number	M-PN2012KN201	M-PN3045KN001	M-PN4135KN001 M-PN4180KN001	M-PX3050KN502
Dimension A	16.7	33.8	54.2	30.4

2.6. External Dimensions

2.6.1. Megatorque Motors

2.6.1.1. PS Series

Fig 2-15 PS1004 type Motor

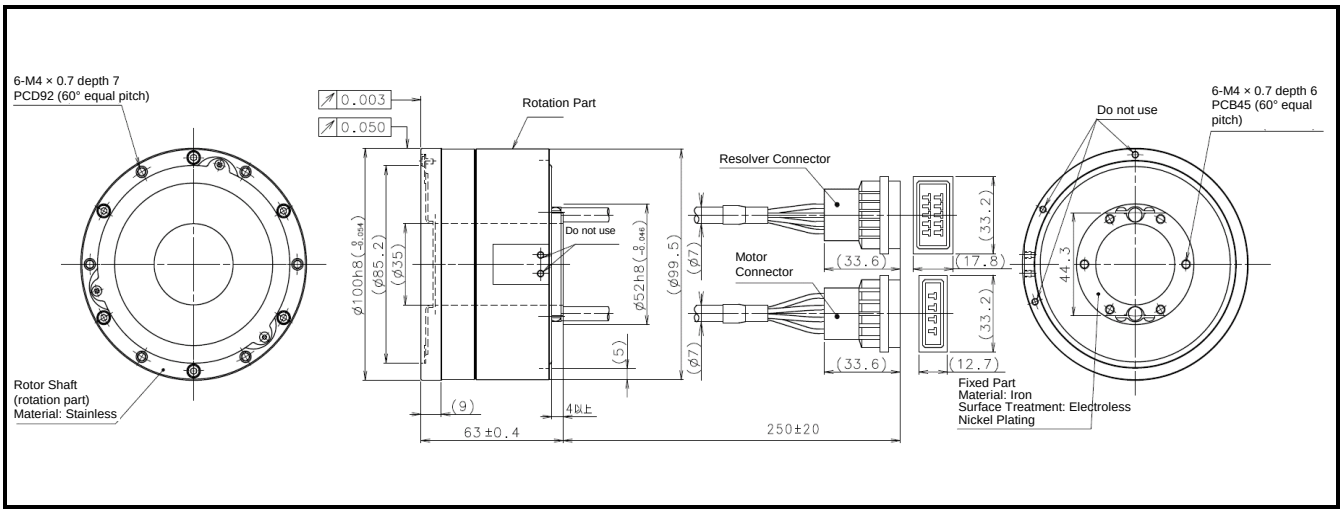

Fig 2-16: PS1006 type Motor

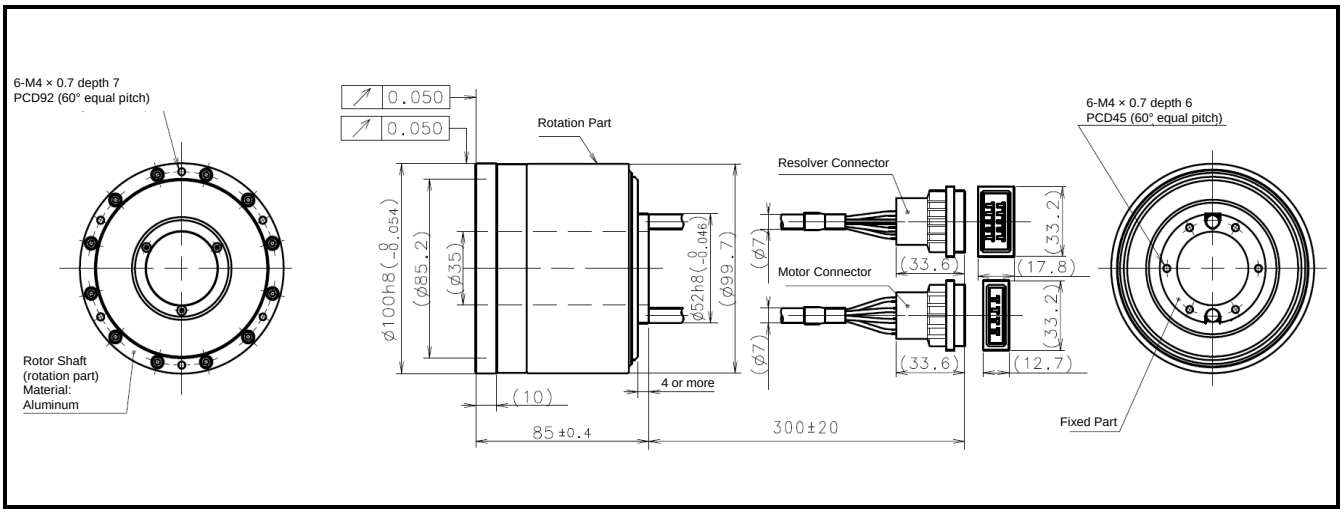

⚠ *Caution : The bend radius of the motor cable lead (⌀7) and the resolver cable lead (⌀7) should be R30 [mm] or more.*

⚠ *Caution : Do not use the leads of the motor cable and the resolver cable with flexing motion.*

⚠ *Caution : Do not add the stress (tension, vibration, etc) to the joint of the leads and the connector. It causes the disconnection and the loose connection.*

Fig 2-17: PS1012 type Motor

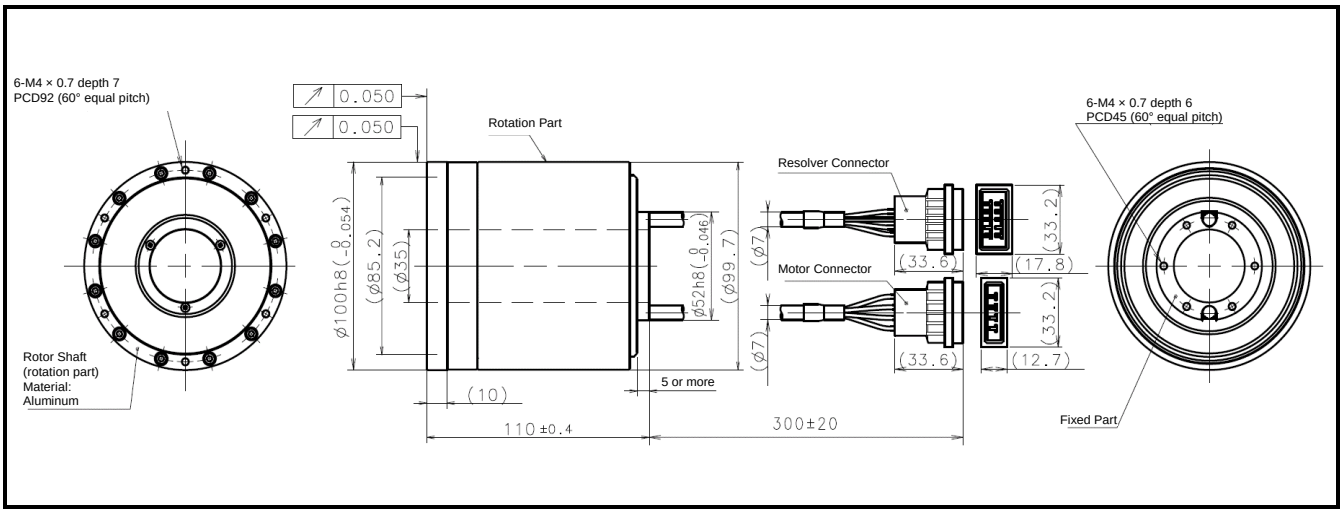

Fig 2-18: PS1018 type Motor

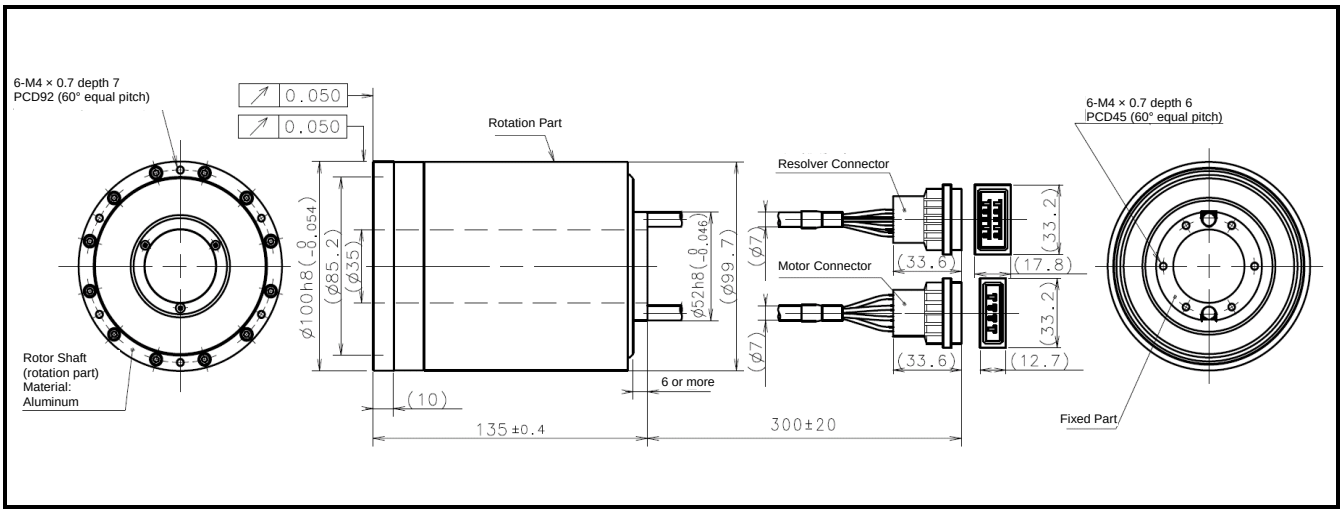

⚠ *Caution : The bend radius of the motor cable lead (ø 7) and the resolver cable lead (ø 7) should be R30 [mm] or more.*

⚠ *Caution : Do not use the leads of the motor cable and the resolver cable with flexing motion.*

⚠ *Caution : Do not add the stress (tension, vibration, etc) to the joint of the leads and the connector. It causes the disconnection and the loose connection.*

Fig 2-19: PS3015 type Motor

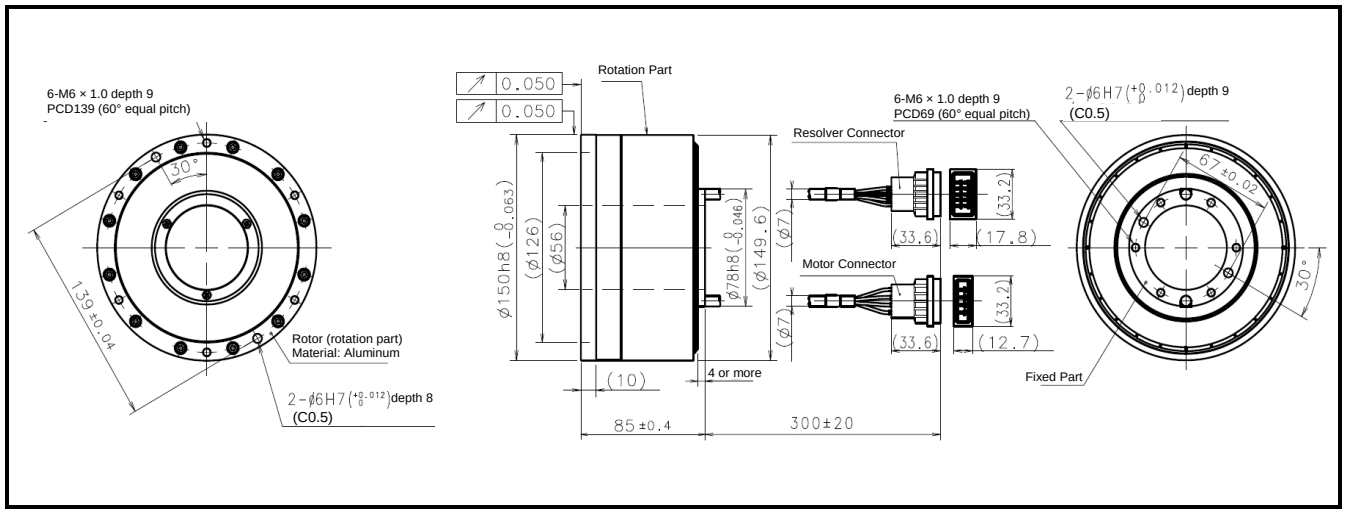

Fig 2-20: PS3030 type Motor

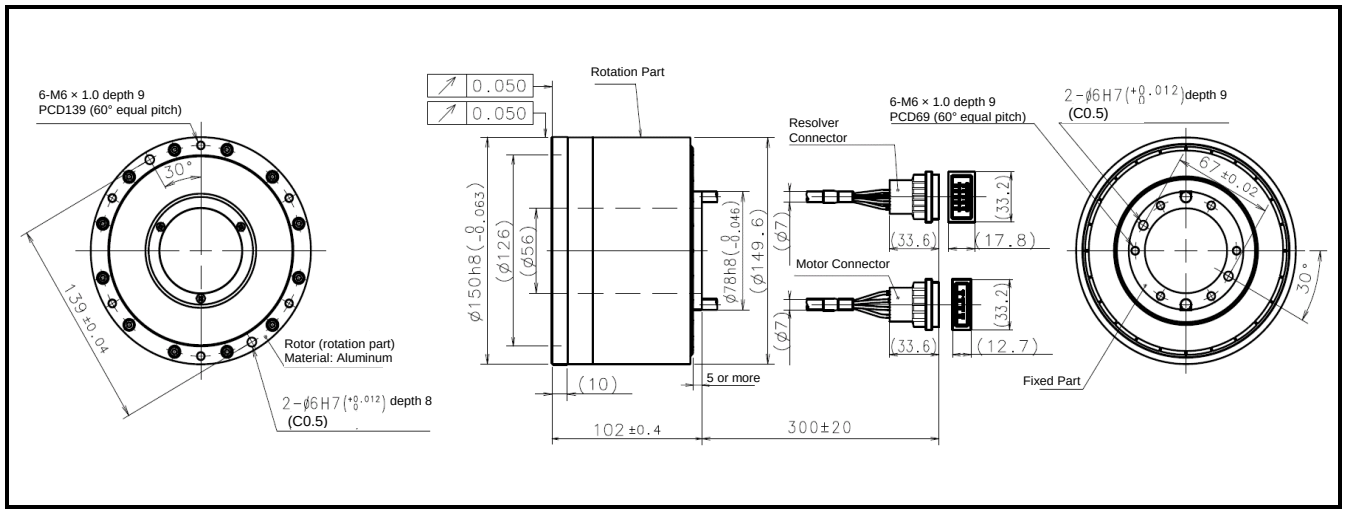

⚠ *Caution : The bend radius of the motor cable lead (ø 7) and the resolver cable lead (ø 7) should be R30 [mm] or more.*

⚠ *Caution : Do not use the leads of the motor cable and the resolver cable with flexing motion.*

⚠ *Caution : Do not add the stress (tension, vibration, etc) to the joint of the leads and the connector. It causes the disconnection and the loose connection.*

Fig 2-21: PS3060 type Motor

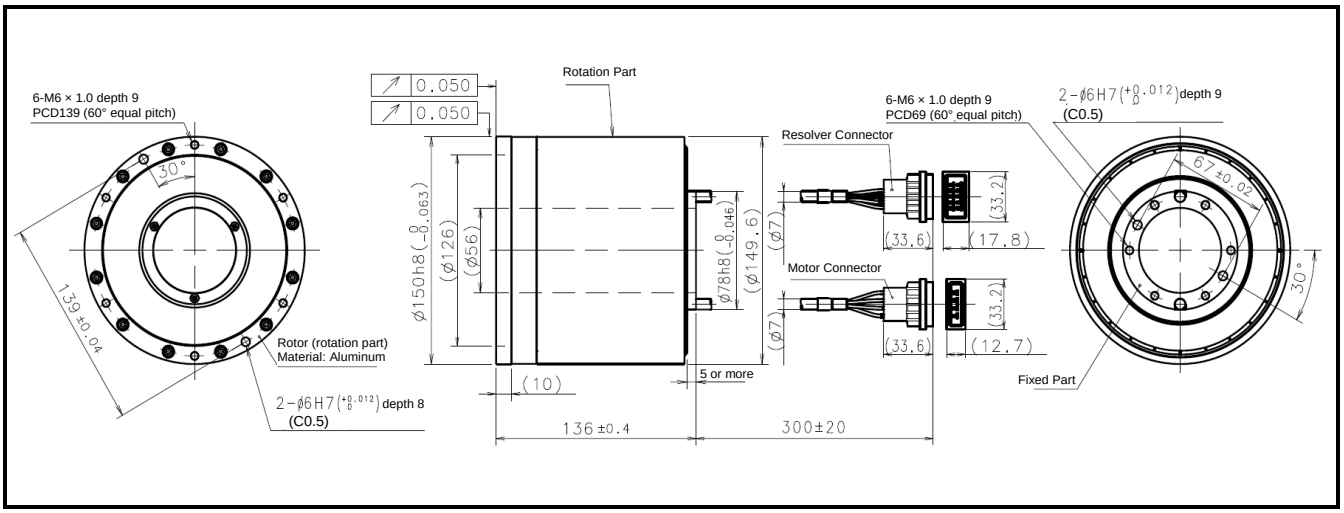

Fig 2-22: PS3090 type Motor

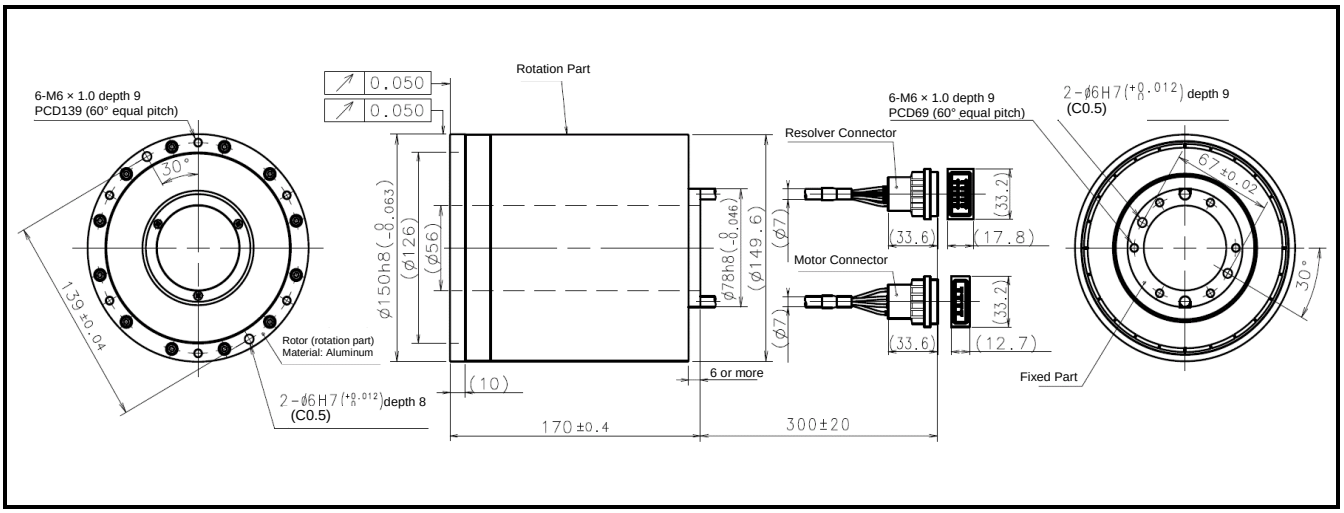

⚠ *Caution : The bend radius of the motor cable lead (ø 7) and the resolver cable lead (ø 7) should be R30 [mm] or more.*

⚠ *Caution : Do not use the leads of the motor cable and the resolver cable with flexing motion.*

⚠ *Caution : Do not add the stress (tension, vibration, etc) to the joint of the leads and the connector. It causes the disconnection and the loose connection.*

2.6.1.2. PN Series

Fig 2-23: PN2012 type Motor

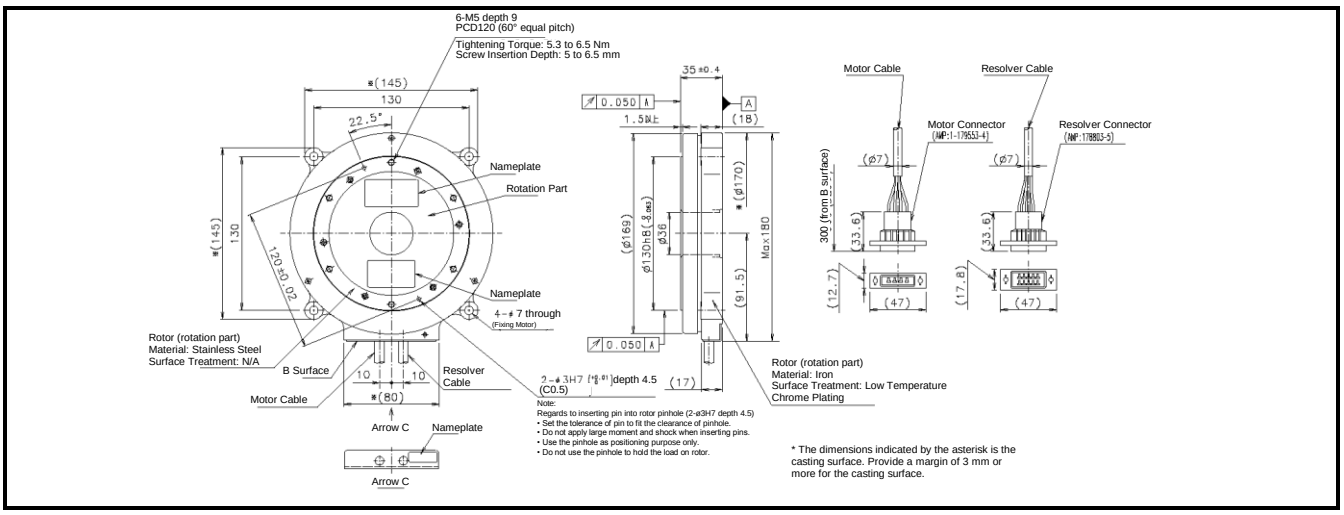

⚠ *Caution : The bend radius of the motor cable lead (ø 7) and the resolver cable lead (ø 7) should be R30 [mm] or more.*

⚠ *Caution : Do not use the leads of the motor cable and the resolver cable with flexing motion.*

⚠ *Caution : Do not add the stress (tension, vibration, etc) to the joint of the leads and the connector. It causes the disconnection and the loose connection.*

Fig 2-24: PN3045 type Motor

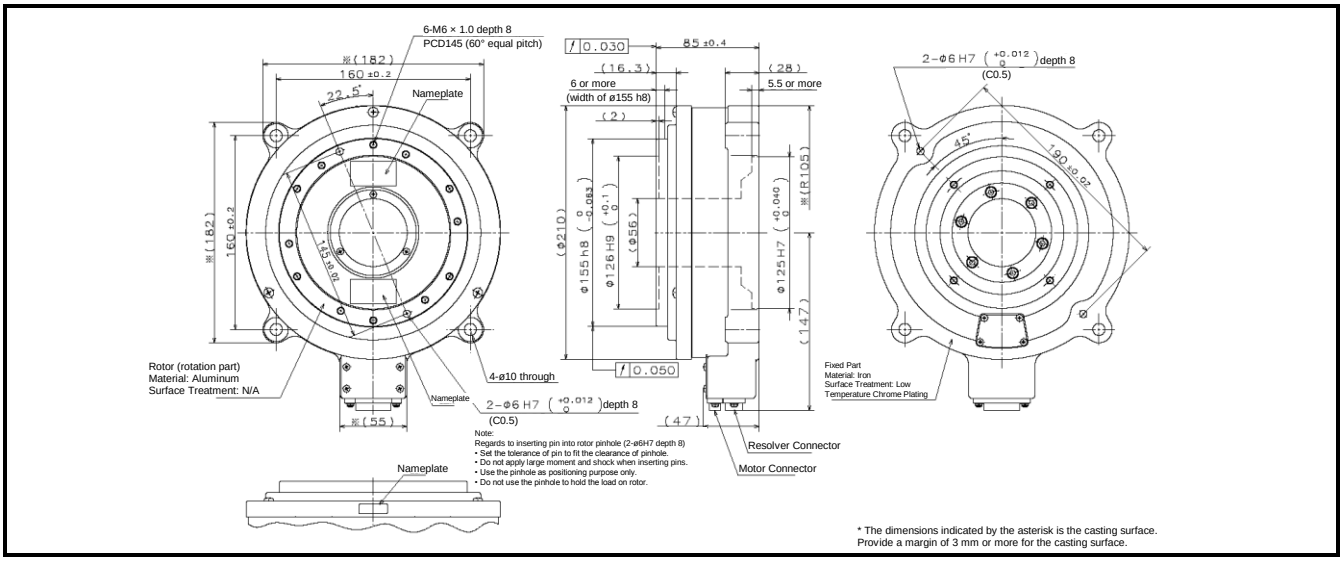

Fig 2-25: PN4135 type Motor

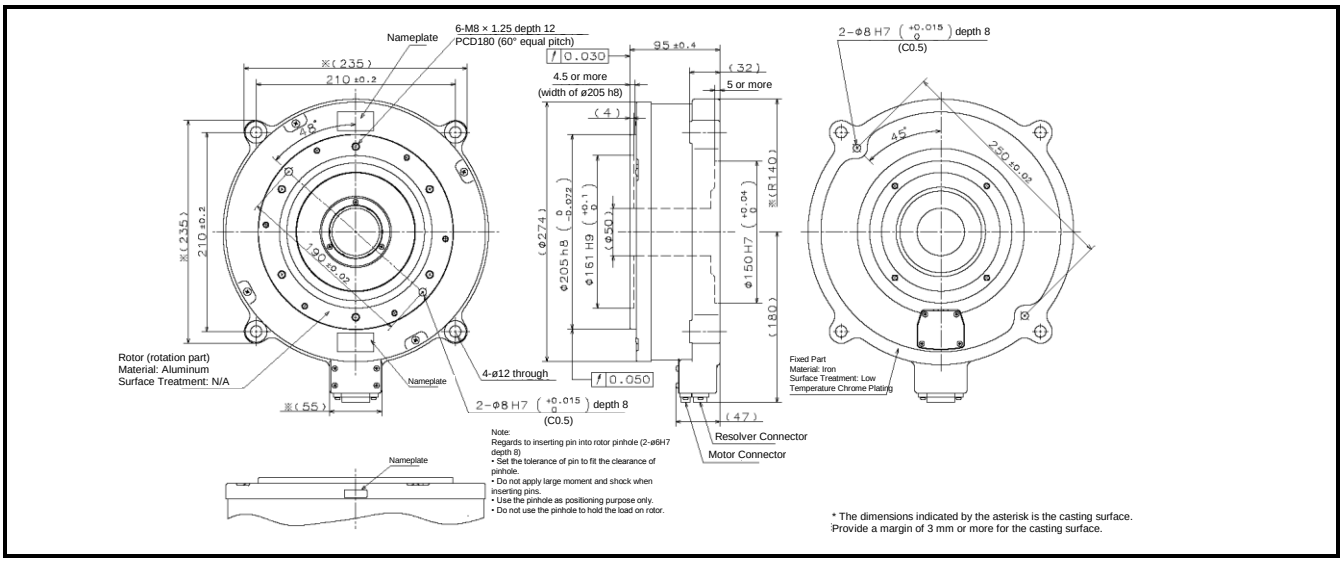

Fig 2-26: PN4180 type Motor

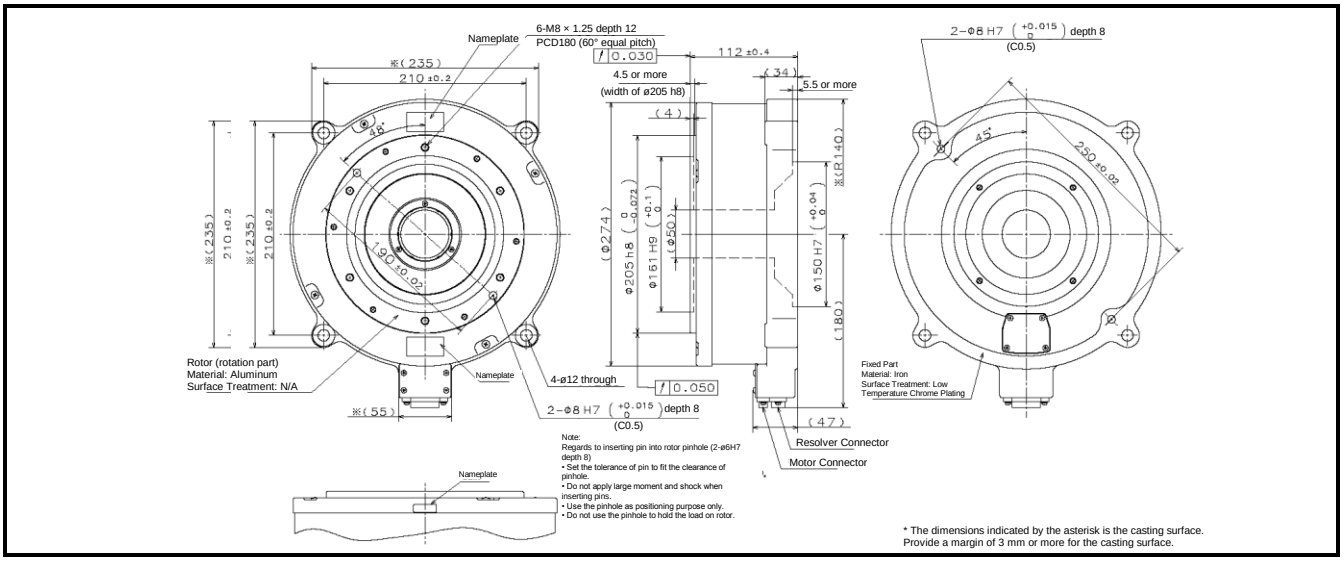

2.6.1.3. PX Series

Fig 2-27: PX3050 type Motor

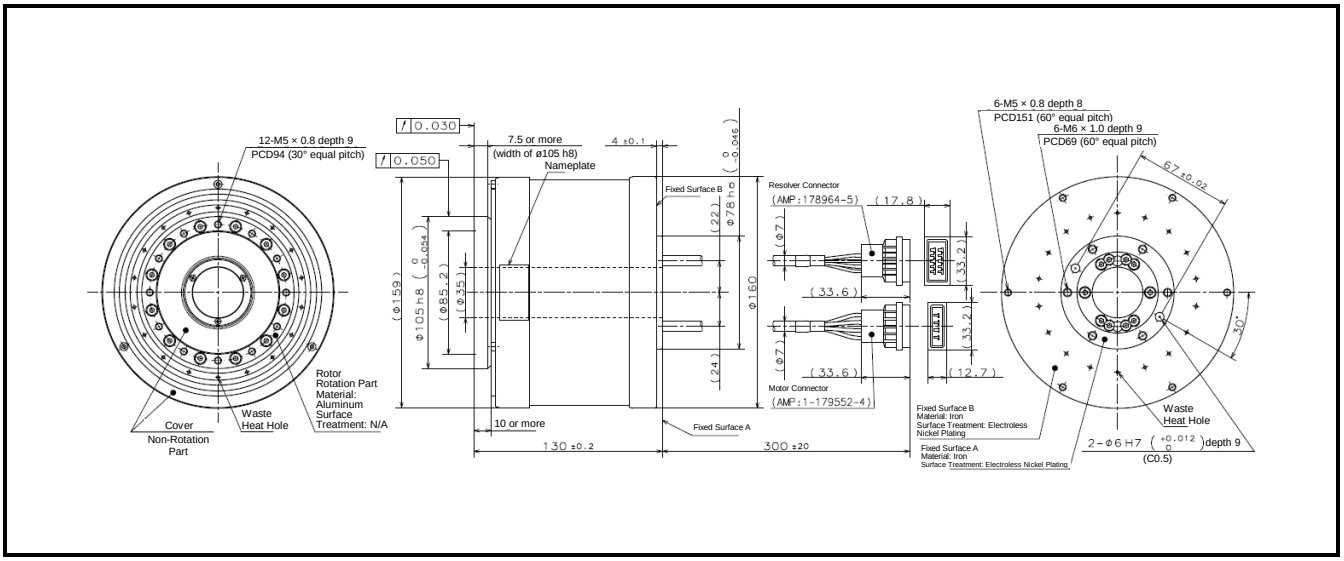

⚠ *Caution : The bend radius of the motor cable lead (ø 7) and the resolver cable lead (ø 7) should be R30 [mm] or more.*

⚠ *Caution : Do not use the leads of the motor cable and the resolver cable with flexing motion.*

⚠ *Caution : Do not add the stress (tension, vibration, etc) to the joint of the leads and the connector. It causes the disconnection and the loose connection.*

2.6.2. Driver Unit Model EDD

Fig 2-28: Driver Unit Model EDD
(Motor type: PS1004, PS1006, PS1012, PS1018, PS3015, PS3030, and PN2012)

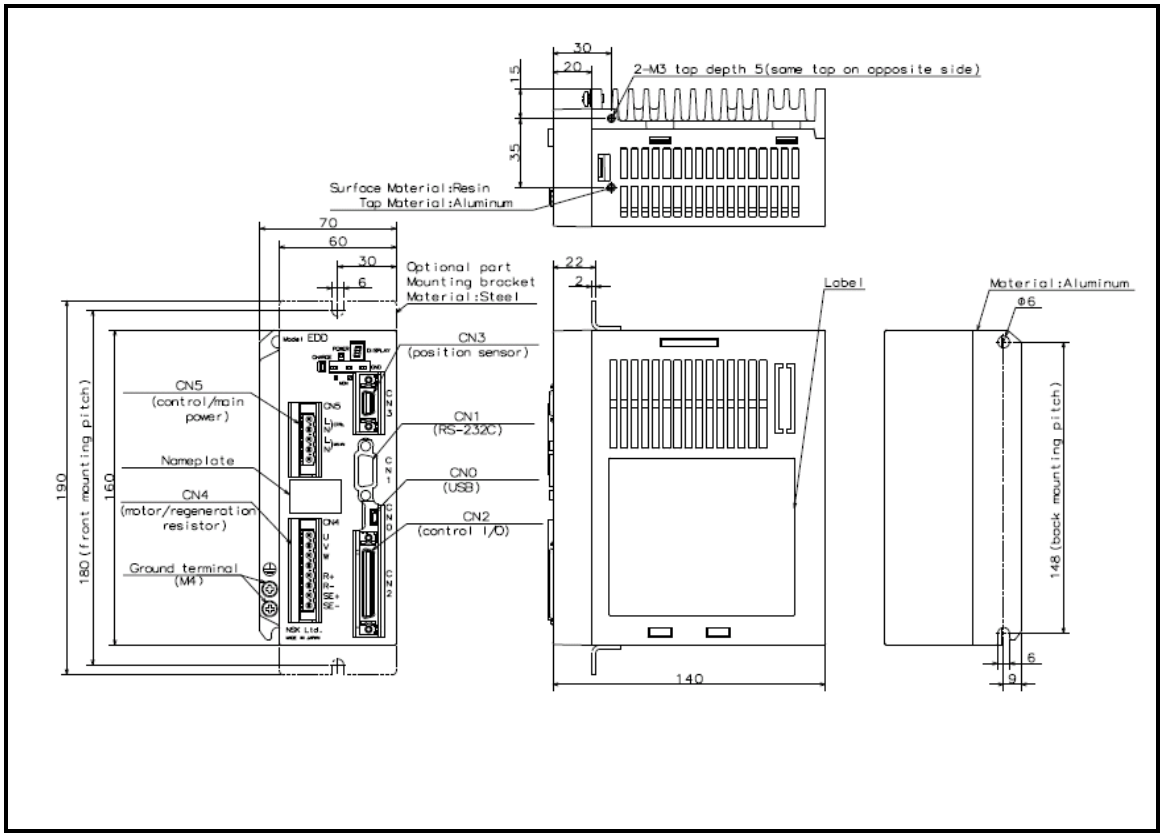

Fig 2-29: Driver Unit Model EDD
(Motor type: PS3060, PS3090, PN3045, PN4135, PN4180, and PX3050)

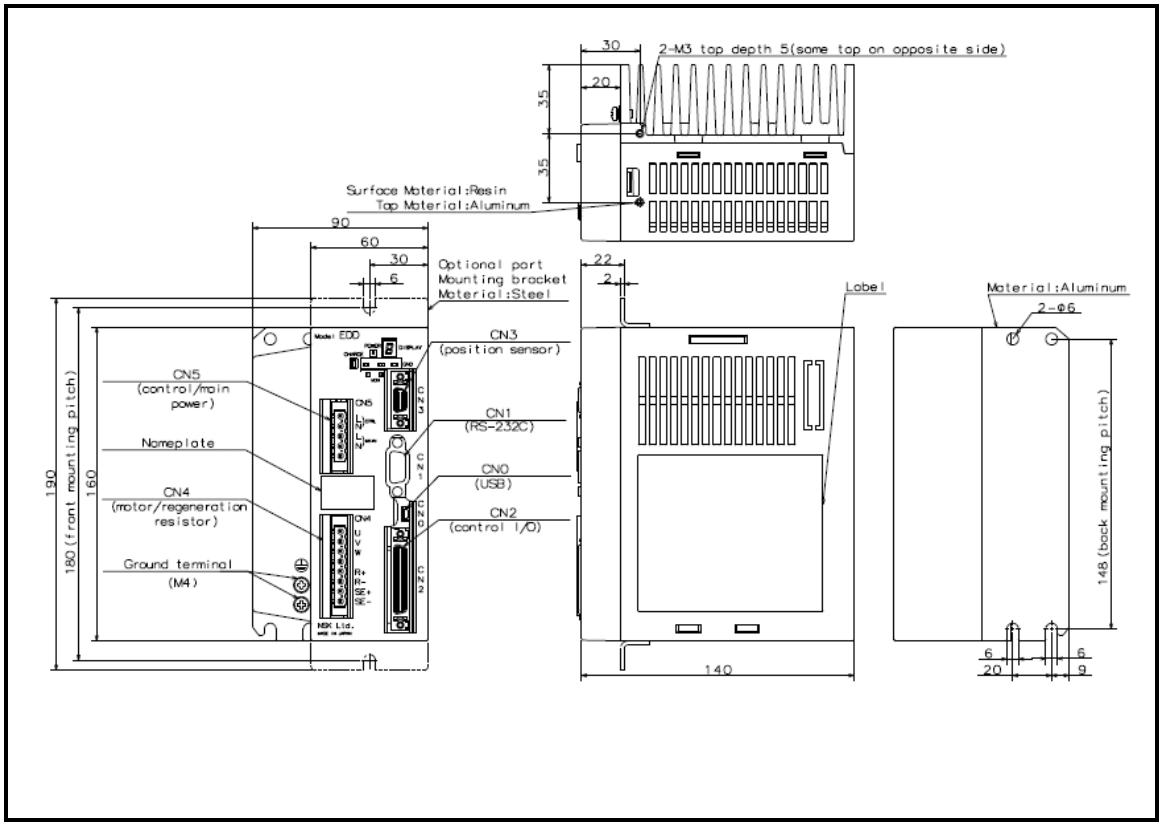

2.6.3. Cable Set

⚠ *Caution : If you connect the cable to a moving part, be sure to use a flexible type cable.*

2.6.3.1. Stationary Cable

⚠ *Caution : Bending radius of a Motor cable (ø 8) and resolver cable (ø 8) shall be R43 mm or over.*

⚠ *Caution : Do not add the stress (tension, vibration, etc) to the cable and the connector. It causes the disconnection and the loose connection.*

Fig 2-30: Cable Set (Fixed type: M-C0×××SDP03)

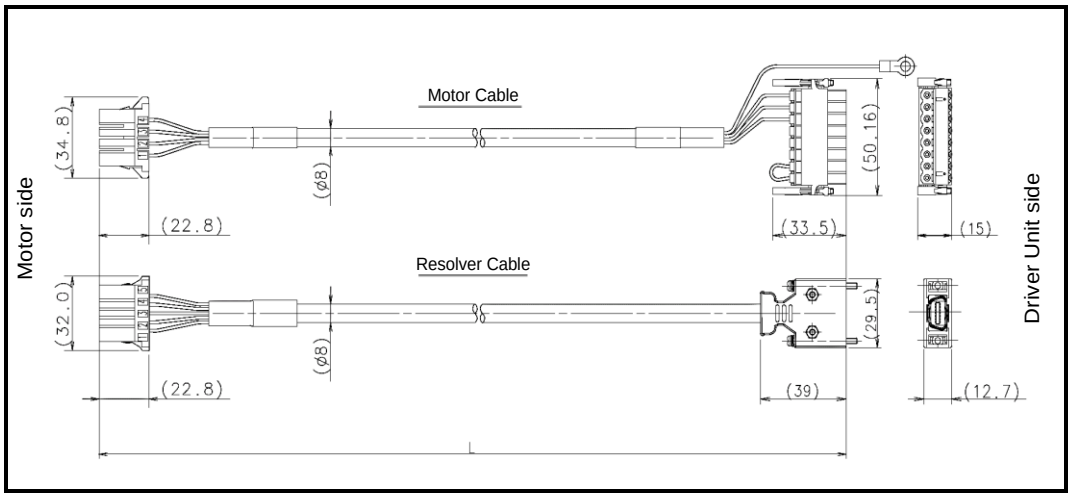

2.6.3.2. Flexible Cable

⚠ *Caution : Do not move the following parts.*

- A range of 200 [mm] from the end face of the Motor side receptacle housing
- A range of 200 [mm] from the end face of the Driver Unit side plug assembly and connector header

⚠ *Caution : The bending radius of a Motor cable (ø 8) and resolver cable (ø 8) shall be R80 mm or over. The radius of cables at the connecting position shall be R40 mm or over.*

⚠ *Caution : Do not add the stress (tension, vibration, etc) to the cable and the connector. It causes the disconnection and the loose connection.*

Fig 2-31: Cable Set (Flexible type: M-C0×××SDP13)

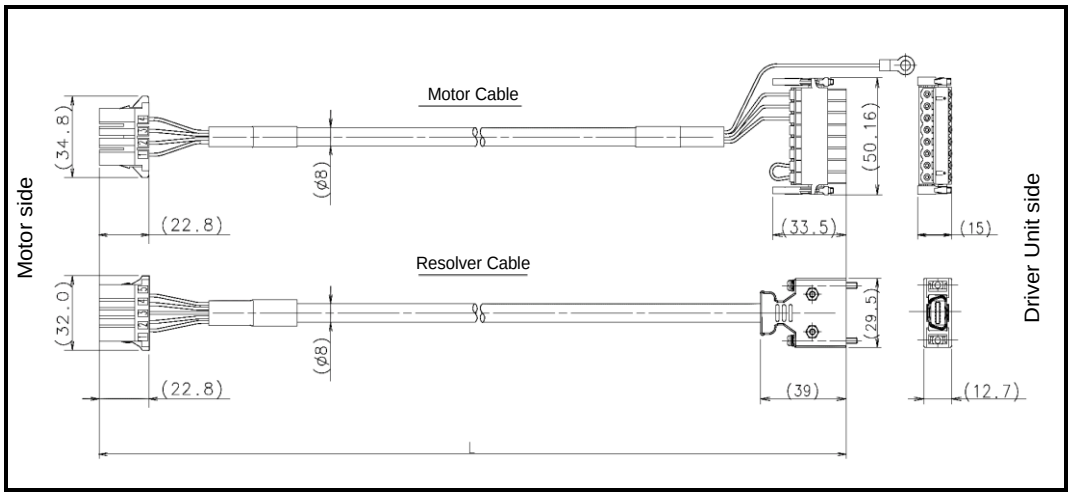

2.7. Driver Unit Specifications

Table 2-11: Specifications of Driver Unit Model EDD (PS Series)

Item			Specification							
Motor type			**PS1004**	**PS1006**	**PS1012**	**PS1018**	**PS3015**	**PS3030**	**PS3060**	**PS3090**
Output current	Continuous output [Arms]		0.5	0.8	1.2	2.1	2.1	2.5	4.1	4.0
	Maximum output [Arms]		2.6	2.4	3.5	5.8	6.6	8.2	14.9	14.9
Input power	Rated capacity [kVA]		0.3	0.3	0.4	0.6	0.6	0.9	0.45	0.6
	Max. capacity [kVA]*3		1.1 / 0.3	1.0 / 0.4	1.4/ 0.6	2.2 / 0.9	2.2 / 1.0	2.7 / 1.2	4.6 / 2.0	4.7 / 2.2
	Control capacity [kVA]		0.06							
	Control power		Single phase 100 to 240 [VAC]							
	Main power		50/60[Hz] Voltage Fluctuation: +10/-15[%] or less							
Position sensor resolution [count/revolution]			2 621 440							
Maximum velocity speed [s^{-1}]			10*1							
Control mode	Positioning control		Program operation (256 program channels), Pulse train command, RS-232C serial communication command, Jogging, Home Return							
	Velocity control		RS-232C serial communication command, Analog input command							
	Torque control		RS-232C serial communication command, Analog input command							
Input signal	Pulse train command		Photo coupler input. Maximum frequency 2 [Mpps] Input format: CW/CCW, Pulse & direction or øA/øB Resolution changer for free manipulation is available. (1000 to 5 242 880 [count/revolution])							
	Analog input		Analog command voltage input voltage ±10 [V]							
	Control input		Photo coupler (± common), 17 input ports. Input voltage: 24 [VDC] Emergency stop, Alarm clear, Over travel limit + direction, Over travel limit – direction, Servo ON, Program operation start, Stop, Internal program channel switching 0 to 7, Jog, Jog direction, (Hold, Velocity override, Integration OFF, Home Return start, and Home position limit) *2							
Output signal	Position feedback signal		Signal format: øA/øB/øZ line driver. Free resolution setting to øA/øB is available. Resolution of øA/øB: Shipping set: 20 480 [count/revolution] (Quadrupled: 81 920) Maximum: 1 310 720 [count/revolution] (Quadrupled: 5 342 880) *Because the maximum frequency is 781 [kHz], the setting of the resolution limits the maximum rotational speed. (Max. velocity = 781 [kHz]/ resolution of øA (øB) Resolution of øZ: 80 [count/revolution]							
	Control output		Photo coupler (± common), 8 output ports. Max. switching capacity: 24 [VDC]/50 [mA] Driver Unit ready, Warning, Travel limit detection +/- directions, Servo state, Busy, In-position, Target proximity A (Target proximity B, Zone A•B•C, Travel limit +/- directions, Normal, Position error under/over, Velocity under/over, Torque command under/over, Thermal loading under/over, Home Return complete, Home position defined)*2							
Alarm			Excess error, Program error, Automatic tuning error, Position command/Position feedback error, Software thermal error, Home position undefined, Main AC line under voltage, Over travel limit, RAM error, ROM error, System error, Interface error, ADC error, Emergency stop, CPU error, Position sensor error, Absolute position error, Motor cable disconnected, Excess velocity, Commutation error, Overheat, Main AC line over voltage, Excess current, Control AC line under voltage, Power module error							
Monitors			Analog monitor ×2, (Free range and offset setting), RS-232C/USB monitor							
Communication			RS-232C serial communication (Asynchronous, 9600 [bps]), USB (USB2.0 compatible)							
Data backup			EEPROM (Overwriting and deleting of parameters are limited to 100 000 times.)							
Others			•Automatic tuning •Function set to Input/Output ports available •Temporal parameter setting by program is available •Individual acceleration/deceleration setting •Acceleration profiling (deformation sine, deformation trapezoid, cycloid, simple harmonic)							
Environmental conditions	Operating temperature / Storing temperature		0 to 50[°C] / -20 to 70[°C]							
	Operation / storing humidity		90% or less. No condensation. 20 to 80% for storing (no condensation)							
	Vibration resistance		4.9 [m/s^2]							
Internal function	Regeneration		Optional regeneration resistor available when the regeneration energy is beyond 28[J]. • Connect to R+, R-, SE+ and SE-. (Never short-circuit them.)							
	Dynamic brake		Functions at power-off, servo-off and an occurrence of alarm.							
Compatible safety regulation	UL		UL61800-5-1							
	CE	LVD	EN61800-5-1							
		EMC	EN61800-3							
Connector	USB	CN0	USB mini-B							
	RS-232C	CN1	D-sub 9 pins							
	Control I/O	CN2	Half pitch connector 50 pins							
	Position sensor	CN3	Half pitch connector 14 pins							
	Motor / optional regeneration resister	CN4	Plastic connector							
	Control / main power source	CN5	Plastic connector							
Mass [kg]			1.1						1.6	

*1: Depends on the Motor type. Refer to "2.5 Motor Specifications."
*2: Change of function assignment of the Input/Output ports will make these functions effective.
*3: The displayed numerical values are a combination with the Driver Unit power voltage 200 [VAC] / 100 [VAC].

Table 2-12: Specifications of Driver Unit Model EDD (PN Series/PX Series)

Item			PN2012	PN3045	PN4135	PN4180	PX3050
Output current	Continuous output [Arms]		1.2	4.5	4.5	4.5	3.9
	Maximum output [Arms]		6.5	14.9	14.9	14.9	14.9
Input power	Rated capacity [kVA〕		0.2	0.5	0.8	1.0	1.0
	Max. capacity [kVA]*3		2.3 / 0.8	4.1 / 1.9	4.8 / —	4.8 / —	4.5 / —
	Control capacity [kVA]		0.06				
	Control power		Single phase 100 to 240 [VAC] 50/60[Hz] Voltage Fluctuation: ±10/15[%] or less		Single phase 200 to 240 [VAC] 50/60[Hz] Voltage Fluctuation: ±10/15[%] or less		
	Main power						
Position sensor resolution [count/revolution]			2 621 440				
Maximum velocity speed [s^{-1}]			10*1				
Control mode	Position control		Program operation (256 program channels), Pulse train command, RS-232C serial communication command, Jogging, Home Return				
	Velocity control		RS-232C serial communication command, Analog input command				
	Torque control		RS-232C serial communication command, Analog input command				
Input signal	Pulse train command		Photo coupler input. Maximum frequency 2 Mpps Input format: CW/CCW, Pulse & direction or øA/øB Resolution changer for free manipulation is available. (1000 to 5 242 880 [count/revolution])				
	Analog input		Analog command voltage input voltage ±10 [V]				
	Control input		Photo coupler (± common), 17 input ports. Input voltage: 24 VDC Emergency stop, Alarm clear, Over travel limit + direction, Over travel limit – direction, Servo ON, Program operation start, Stop, Internal program channel switching 0 to 7, Jog, Jog direction, (Hold, Velocity override, Integration OFF, Home Return start, and Home position limit) *2				
Output signal	Position feedback signal		Signal format: øA/øB/øZ line driver. Free resolution setting to øA/øB is available. Resolution of øA/øB: Shipping set: 20 480 [count/revolution] (Quadrupled: 81 920) Maximum: 1 310 720 [count/revolution] (Quadrupled: 5 342 880) *Because the maximum frequency is 781 [kHz], the setting of the resolution limits the maximum rotational speed. (Max. velocity = 781 [kHz] / resolution of øA (øB) Resolution of øZ: 80 [count/revolution]				
	Control output		Photo coupler (± common), 8 output ports. Max. switching capacity: 24 VDC/50 [mA] Driver Unit ready, Warning, Travel limit detection + directions, Servo state, Busy, In-position, Target proximity A (Target proximity B, Zone A•B•C, Travel limit +/- directions, Normal, Position error under/over, Velocity under/over, Torque command under/over, Thermal loading under/over, Home Return complete, Home position defined)*2				
Alarm			Excess error, Program error, Automatic tuning error, Position command/Position feedback error, Software thermal error, Home position undefined, Main AC line under voltage, Over travel limit, RAM error, ROM error, System error, Interface error, ADC error, Emergency stop, CPU error, Position sensor error, Absolute position error, Motor cable disconnected, Excess velocity, Commutation error, Overheat, Main AC line over voltage, Excess current, Control AC line under voltage, Power module error				
Monitors			Analog monitor ×2, (Free range and offset setting), RS-232C/USB monitor				
Communication			RS-232C serial communication (Asynchronous, 9600 bps), USB (USB2.0 compatible)				
Data backup			EEPROM (Overwriting and deleting of parameters are limited to 100 000 times.)				
Others			•Automatic tuning •Function set to Input/Output ports available •Temporal parameter setting by program is available •Individual acceleration/deceleration setting •Acceleration profiling (deformation sine, deformation trapezoid, cycloid, simple harmonic)				
Environ-mental conditions	Operating temperature / storing temperature		0 to 50[℃] / -20 to 70[℃]				
	Operating humidity / storing humidity		90% or less. No condensation.				
	Vibration resistance		4.9[m/s^2]				
Internal function	Regeneration		Optional regeneration resistor available when the regeneration energy is beyond 28[J]. • Connect to R+, R-, SE+ and SE-. (Never short-circuit them.)				
	Dynamic brake		Functions at power-off, servo-off and an occurrence of alarm. Brake can be released by command (refer to "9.3.Glossary of Command and Parameter " command KB)				
Compatible safety regulation	UL		UL61800-5-1				
	CE	LVD	EN61800-5-1				
		EMC	EN61800-3				
Connector	USB	CN0	USB mini-B				
	RS-232C	CN1	D-sub 9 pins				
	Control I/O	CN2	Half pitch connector 50 pins				
	Position sensor	CN3	Half pitch connector 14 pins				
	Motor/ optional regeneration resister	CN4	Plastic connector				
	Control / main power source	CN5	Plastic connector				
Mass [kg]			1.1	1.6			

*1: Depends on the Motor type. Refer to "2.5 Motor Specifications."
*2: Change of function assignment of the Input/Output ports will make these functions effective.
*3: The displayed numerical values are a combination with the Driver Unit power voltage 200 [VAC] / 100 [VAC].

2.8. USB Interface Specifications

⚠ *Caution : Use a cable of 3 m or less for a connection cable with PC, etc.*

⚠ *Caution : Be sure to connect a protective ground of the Driver Unit Model EDD.*

- Failure to connect a protective device may result in electric shock, and also cause PC malfunctions.

⚠ *Caution : USB communication is for maintenance. Do not use it for normal operation.*

⚠ *Caution : When USB communication and RS-232C serial communication are performed at the same time, USB communication is processed first, then RS-232C serial communication is processed.*

- Refer to "8.10 USB Communication" for specifications of USB communication.

2.8.1. CN0: USB Communication Connector

* Use EDD MEGATERM as PC side terminal software of USB communication.

Table 2-13: CN0 Connector List

Driver Unit side connector USB mini-B	J.S.T. Mfg. Co., Ltd.	UB-M5BR-DMP14-4S or equivalent

2.8.1.1. Pin-Out (CN0)

Fig 2-32: CN0 Pin-out

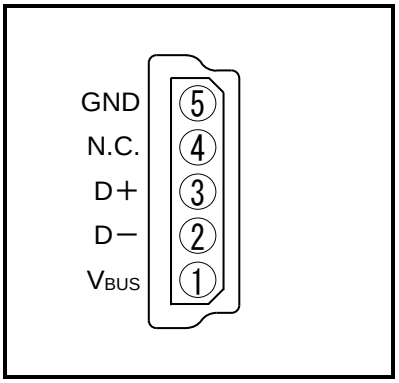

2.8.1.2. CN0 Signal List

Table 2-14: CN0 Signal List

Pin	Signal name	I/O	Function
1	V_{BUS}	Output	+5 V power source
2	D -	I/O	Transmit / receive data (differential)
3	D +	I/O	Transmit / receive data (differential)
4	N.C.	—	—
5	GND	—	GND

2.9. RS-232C Interface Specifications

- Refer to “8.9. RS-232C Communication” for specifications of RS-232C communication.
- Refer to “Appendix 7. Wiring of RS-232C Communication Cable” for connecting with a control device.
  - ◊ Optional RS-232C cable [M-C003RS03] is available from NSK.

2.9.1. CN1: RS-232C Serial Communication Connector

* The optional Handy Terminal FHT 31 is available for the RS-232C communication terminal.

Table 2-15: Connector list

Driver Unit connector	Japan Aviation Electronics Industry, Ltd.	DELC-J9SAF-13L9E or equivalent
Mating connector type		DE-9PF-N* or equivalent
Mating connector shell type		DE-C2-J6R* or equivalent

* The user shall provide these connectors.
They are not necessary if NSK Handy Terminal FHT 21 is used.

2.9.1.1. CN1 Pin-Out

Fig 2-33: Pin-out

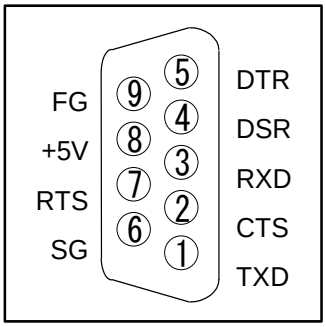

2.9.1.2. CN1 Signal List

Table 2-16: Signal list

Pin	Signal name	I/O	Function
1	TXD	Output	Transmit data
2	CTS	Input	Clear to send
3	RXD	Input	Receive data
4	DSR	Input	Data set ready
5	DTR	Output	Data terminal ready
6	SG	–	Digital signal ground
7	RTS	Output	Ready to send
8	+5V	Output	Never connect
9	FG	–	Frame ground (shield)

2.10. Specifications of Control Input/Output Interface

2.10.1. CN2: Control Input/Output Signal Connector

- The connector and the mating connectors to be used for the CN2 connector are listed in the "Table 2-17: Connector list."

Table 2-17: Connector list

Driver Unit connector	Japan Aviation Electronics Industry, Ltd.	DF02R050NA6 or equivalent
Mating connector type		DF02P050F22A1 or equivalent
Mating connector hood		DF02D050C21 or equivalent

- The following are wiring precautions for the connector CN2.
  1) Use shielded cable for wiring of the CN2 connector.
  2) Be sure to use twisted cables for the pulse train input and the position feed back signals. Wiring length shall be short as possible.
  3) These cables should be laid separately from the main power line.
  4) Connect one end of the shielded cable to the frame ground. Refer to "3.3.3. Ground Connection and Wiring" for the way of connection.

⚠ *Caution : Check for wiring mistake in the polarity of external power supply and shorting between connector pins.*

⚠ *Caution : Never connect the idle pins that are instructed as "Do not connect." Do not treat the idle pins as instructed at the master controller (PLC, etc) side after you have connected all pins of the CN2 connector.*

- Connection of an idle pin that is clearly instructed not to connect may make the external noise easily affect the Driver Unit, and may lead to malfunction or breakdown of the Driver Unit.

⚠ *Caution : Use a CN2 control I/O cable of less than 2 m.*

2.10.1.1. CN2 Pin-Out

- The pin-out for the CN2: Control Input/Output Signal Connector is shown in the " Fig 2-34: Pin-out (shipping set)."
- For each port of CN2, assignment of Input/Output function can be changed. (Except for some ports)
  - ◊ Replace it with extended function
  - ◊ Change already assigned function to another port
  - ◊ Mask function of unused ports

Fig 2-34: Pin-out (shipping set)

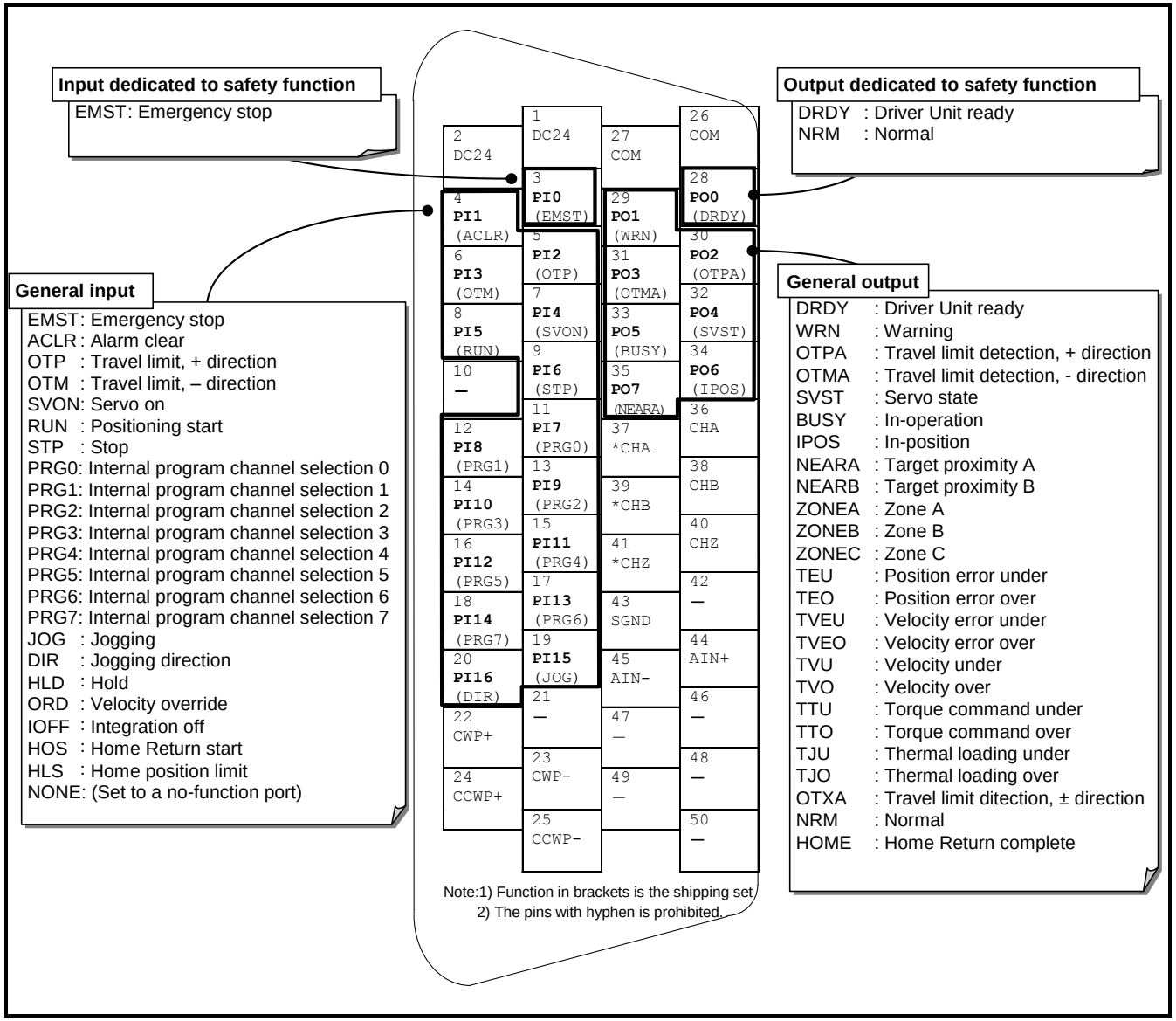

- PI0 and PO0 are the dedicated ports to the safety function input and output respectively.
  - ◊ You cannot change the function setting to the PI0 (Pin number 3: EMST input [Emergency stop]). You may only set the logic of the connector and the stability timer to it.
  - ◊ You can only change the function of the PO0 (Pin number 28: DRDY output [Driver Unit ready]) to the function NRM (normal) output. You cannot set the output logic and the stability timer to it.

2.10.1.2. CN2 Signal List

Table 2-18: Signal list (Shipping set)

Input Output	Pin No	Port code	Signal code	Contact logic	Signal name	Function
Input	1	-	DC24	-	24 VDC external power supply	External power supply for input signal
	2	-	DC24	-	24 VDC external power supply	External power supply for input signal
	3	PI0	EMST	B	Emergency stop	Terminates positioning operation and the Motor stops by the dynamic break.
	4	PI1	ACLR	A	Alarm clear	Clears warning.
	5	PI2	OTP	B	Over travel limit, + direction	If OTP goes active, the Motor servo is locked in the CW direction.
	6	PI3	OTM	B	Over travel limit, - direction	If OTM goes active, the Motor servo is locked in the CCW direction.
	7	PI4	SVON	A	Servo-on	If SVON goes active, the servo turns on and the System waits for a command to be entered.
	8	PI5	RUN	A	Start program	Starts program operation specified by the PRG input.
	9	PI6	STP	A	Stop	Stops positioning operation and execution of the program.
	10	-	-	-	Do not connect	-
	11	PI7	PRG0	A	Internal program channel selection 0	For a program positioning operation: A combination of ON OFF of PRG0 to PRG7 inputs specifies a channel (0 to 255) to be executed.
	12	PI8	PRG1	A	Internal program channel selection 1	
	13	PI9	PRG2	A	Internal program channel selection 2	
	14	PI10	PRG3	A	Internal program channel selection 3	
	15	PI11	PRG4	A	Internal program channel selection 4	
	16	PI12	PRG5	A	Internal program channel selection 5	
	17	PI13	PRG6	A	Internal program channel selection 6	
	18	PI14	PRG7	A	Internal program channel selection 7	
	19	PI15	JOG	A	Jogging	If JOG goes active, the Motor rotates If it goes inactive, the Motor decelerates and stops.
	20	PI16	DIR	A	Jogging direction	Specifies the direction of jogging.
	21	–	–	–	Do not connect	-
	22	–	CWP+	–	CW pulse train (+)	Pulse train command rotates the Motor in the CW direction. • Selection of Step and Direction or øA/øB format is available. • Free setting of pulse input to a circular division is available.
	23	–	CWP-	–	CW pulse train (-)	
	24	–	CCWP+	–	CCW pulse train (+)	Pulse train command rotates the Motor in the CCW direction.
	25	–	CCWP-	–	CCW pulse train (-)	
Output	26	–	COM	–	Output signal common	Common for output signal.
	27	–	COM	–	Output signal common	
	28	PO0	DRDY	Positive	Driver Unit ready	Reports that the Motor is ready to rotate. (Those pins are open when the Motor is not ready or an alarm occurs.)
	29	PO1	WRN	Negative	Warning	Warns abnormality in the System.
	30	PO2	OTPA	Negative	Over travel limit (+ direction) detected	Reports the output of over travel limit (software and hardware) in the plus direction.
	31	PO3	OTMA	Negative	Over travel limit (- direction) detected	Reports the output of over travel limit (software and hardware) in the minus direction.
	32	PO4	SVST	Positive	Servo state	Reports the state of servo.
	33	PO5	BUSY	Positive	In-operation	Reports the state of positioning operation.
	34	PO6	IPOS	Positive	In-position	Reports the condition of positioning error and the positioning operation.
	35	PO7	NEARA	Positive	Target proximity A	Reports that the Motor is approaching to the destination.
	36	–	CHA	–	Position feedback signal øA	A pulse signal that reports the number of rotations of the Motor and is outputted by the line driver unit. Free setting of output resolution in øA/øB phase is available.
	37	–	*CHA	–	Position feedback signal ø*A	
	38	–	CHB	–	Position feedback signal øB	
	39	–	*CHB	–	Position feedback signal ø*B	
	40	–	CHZ	–	Position feedback signal øZ	
	41	–	*CHZ	–	Positioning feedback signal ø*Z	
	42	–	–	–	Do not connect.	–
	43	–	SGND	–	Signal ground	Ground for the position feedback signal.
Input	44		AIN+	–	Analog input	Analog input signal of ±10 [VDC].
	45		AIN-	–	Ground for analog input	–
	46		–	–	Do not connect.	–
	47		–	–	Do not connect.	–
	48		–	–	Do not connect.	–
	49		–	–	Do not connect.	–
	50		–	–	Do not connect.	–

⚠ *Caution : Follow the specification documents for the specially ordered System when its settings of Inputs and Outputs are different from the standard.*

⚠ *Caution : Never connect the idle pins that are instructed as "Do not connect." Do not disconnect the idle pins at the master controller (PLC, etc) side after you have connected all pins of the CN2 connector. It causes the malfunction and the breakdown.*

Table 2-19: Expanded function for function assignable control Input/Output

Input Output	Function code	Function name	Description
Input	HLD	Hold	Pauses the Motor operation and execution of the program.
	ORD	Velocity override	Changes the velocity command in a rate of the specified velocity.
	IOFF	Integration OFF	Terminates velocity integration control.
	HOS	Home Return start	Starts Home Return operation.
	HLS	Home position limit	Reports that the Motor is nearing to the Home position.
Output	NEARB	Target proximity B	Reports that the Motor is nearing to the target position B.
	ZONEA	In-Zone A	Reports that the Motor has entered in a preset zone.
	ZONEB	In-Zone B	
	ZONEC	In-Zone C	
	TEU	Position error, under	Reports condition of position error against the threshold value.
	TEO	Position error, over	
	TVEU	Velocity error under	Reports condition of velocity error against the threshold value.
	TVEO	Velocity error over	
	TVU	Velocity under	Reports condition of velocity.
	TVO	Velocity over	
	TTU	Torque command, under	Reports condition of Driver torque command against the threshold value.
	TTO	Torque command, over	
	TJU	Thermal loading, under	Reports condition of thermal loading against the threshold value.
	TJO	Thermal loading, over	
	OTXA	Travel limit switch, ± direction	Reports detection of limit switch in + or – direction (hardware and software).
	NRM	Normal	Reports detection of alarm or warning.
	HOME	Home return completed	Reports that the Motor has completed Home Return and is on the Home position.
	HCMP	Home position defined	Reports that the Home position has been defined.

2.10.2. CN2 Interfacing

2.10.2.1. General Input Signal

Applied inputs: SVON, EMST, OTP, ACLR, PRG0 to PRG7, JOG, DIR, and STP

Table 2-20: General specifications

Item	Specification
Input voltage	24 VDC ± 10%
Input impedance	3.9 kΩ
Maximum current	10 mA or less (per input)

Fig 2-35: General specifications

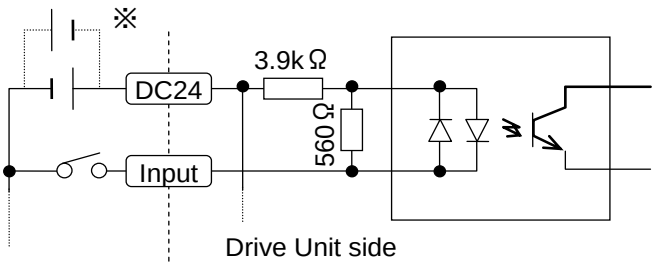

* You may reverse the polarity of the external power supply and connect as “minus • common.”

2.10.2.2. Pulse Train Input Signal

Applied inputs: CCWP +, CCWP -, CWP +, and CWP -

Table 2-21: Pulse train input

Item	Specification
Input voltage	5 VDC ±10%
Input impedance	620 Ω
Maximum current	25 mA or less

Fig 2-36: Pulse train input

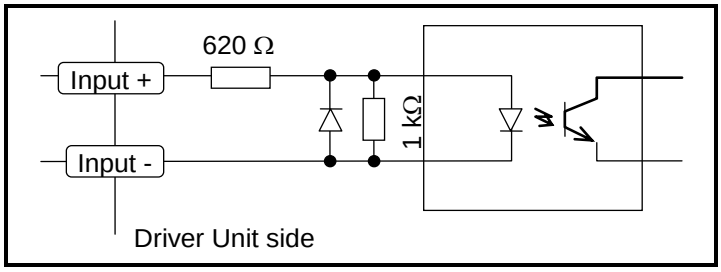

1) Connection with the line driver output.

- Connect directly to the input ports.

Fig 2-37: Connection with the line driver output.

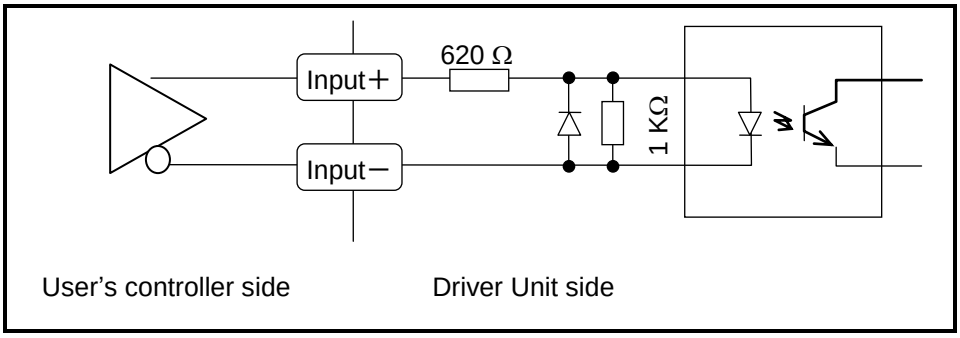

2) Connection with the open collector output.

- Please insert a resistor (68 [Ω],1/8 [W]) into the circuit as shown below.

Fig 2-38: Connection with the open collector output

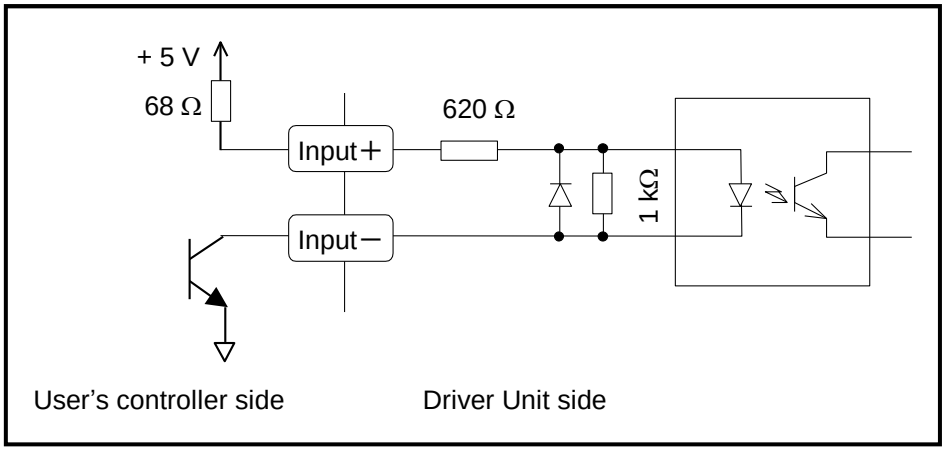

2.10.2.3. Analog Command Input Signal

Applied output: AIN +, AIN -

Table 2-22: Specifications of analog command input signal

Item	Specification
Maximum input voltage	± 10 [VDC]
Input impedance	20 [kΩ]
Maximum input current	0.5 [mA]
ADC resolution	12 [bit]
Effective resolution	10 [bit] (Typ.)

Fig 2-39: Specifications of CN2 analog command input signal

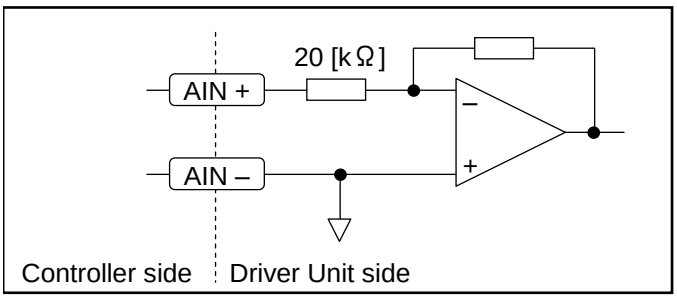

2.10.2.4. Output Signal

Applied output: PO0 to PO7 (Shipping set: DRDY, WRN, OTPA, OTMA, SVST, BUSY, IPOS, and NEARA)

Table 2-23: General output photo coupler specification

Item	Specification
Maximum load capacity	24 VDC/50 mA
Maximum saturated voltage	2 V or less

Fig 2-40: General output photo coupler specification

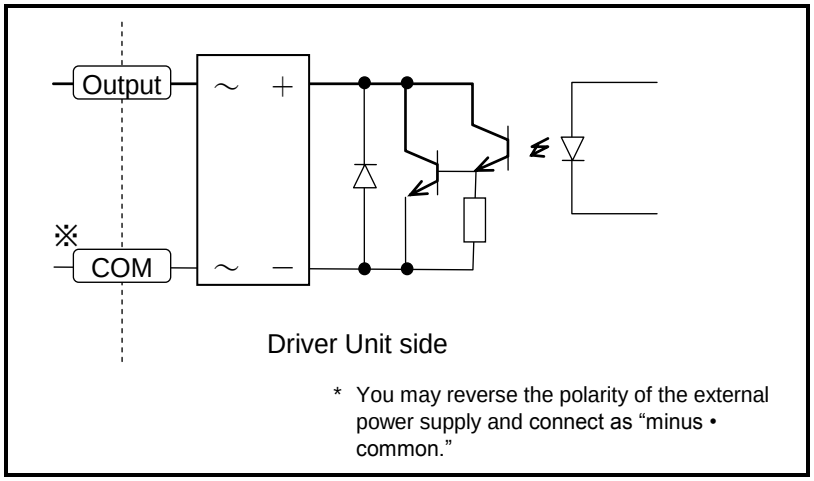

2.10.2.5. Position Feedback Signal Output

Applied output: CHA, CHB, CHZ, *CHA, *CHB, and *CHZ

Table 2-24: Specifications of position feedback output signal

Item	Specification
Output format	Line driver unit (CHA, CHB, CHZ, *CHA, *CHB and *CHZ)
Line driver	Texas Instruments: AM26LV31E or equivalent
Recommended line receiver	Texas Instruments: AM26LV32E, or AM26C32 or equivalent

Fig 2-41: Position feedback signal output

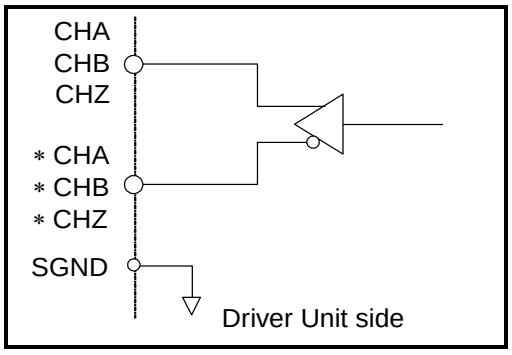

2.10.2.6. Analog Monitor Output

Applied output: MON1, MON2

Table 2-25: Analog monitor specification

Item	Specification
Output format	Op-amp
Maximum output voltage	5 V
Minimum voltage width	5.3 mV
Saturated current	4 mA or less

Fig 2-42: Analog monitor

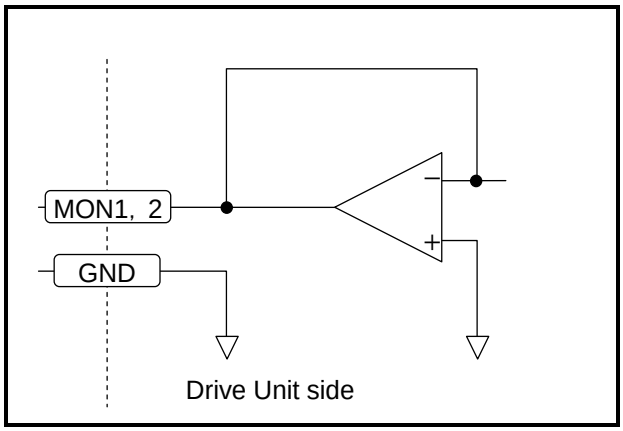

2.11. CN3: Resolver Cable Connector

⚠ *Caution : Connect the Cable Set provided with the Driver Unit. Do not cut or hookup to other cable because the Cable Set is uniquely made for the position sensor.*

Table 2-26: Connector list

Driver Unit connector	Japan Aviation Electronics Industry, Ltd.	DF02R014NA6 or equivalent
Mating connector type	Japan Aviation Electronics Industry, Ltd.	DF02P014F22A1*or equivalent
Mating connector hood	Japan Aviation Electronics Industry, Ltd.	DF02D014C21*or equivalent

* Provided with the Cable Set.

2.11.1. CN3 Pin-Out

Fig 2-43: Pin-out

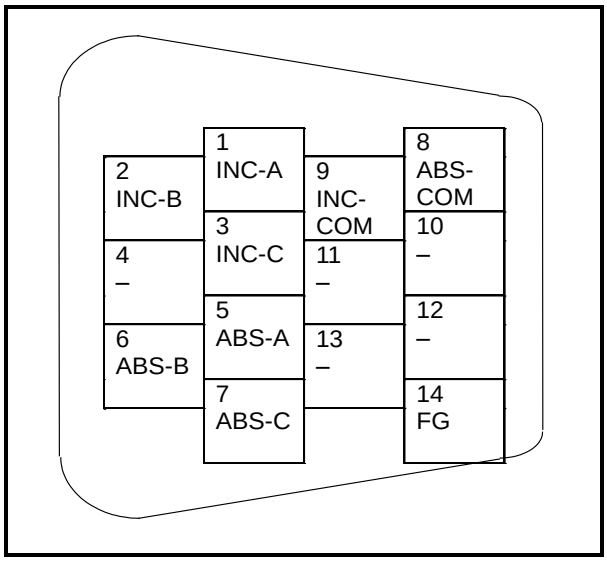

2.11.2. CN3 Signal List

Table 2-27: Signal list

Pin	Signal name	Function
1	INC-A	Incremental resolve signal øA
2	INC-B	Incremental resolver signal øB
3	INC-C	Incremental resolver signal øC
5	ABS-A	Absolute resolver signal øA+
6	ABS-B	Absolute resolver signal øB+
7	ABS-C	Absolute resolver signal øC+
8	ABC-COMMON	Absolute resolver common
9	INC-COMMON	Incremental resolver common
14	FG	Frame ground

⚠ *Danger : Never connect pins not listed above.*

⚠ *Danger : Check orientation of the connector when inserting it. Tighten the screws to secure the connector so that it does not disconnect because of shock or pulling.*

⚠ *Danger : Do not connect or disconnect the cable when the power of the Driver Unit is on.*

2.12. CN4: Motor Connector

⚠ *Caution : Use the Cable Set provided with the Driver Unit. Please do not cut the cable or hookup to other cable because the Cable Set is specially made for the position sensor.*

Table 2-28: Connector list

Connector of Driver Unit	PHOENIX CONTACT	MSTBA2,5/8-G-5,08-LR or equivalent
Mating connector	PHOENIX CONTACT	FKC 2,5/8-ST-5,08-LR *or equivalent

* Provided with the Cable Set.

2.12.1. CN4 Pin-Out

Fig 2-44: Pin-out

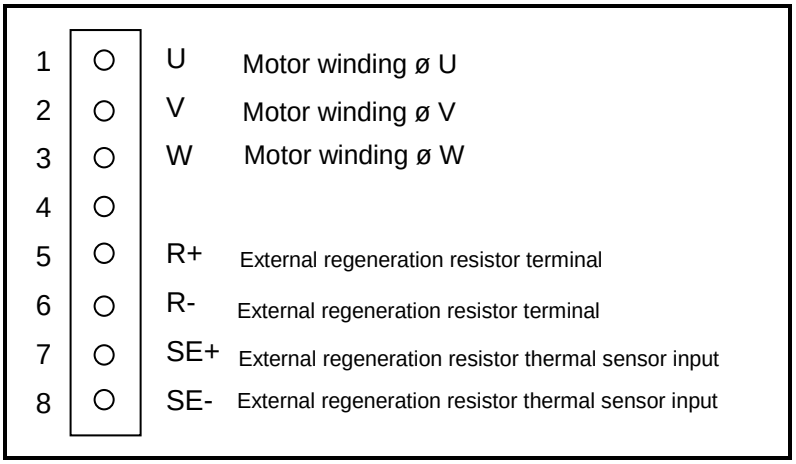

2.12.2. CN4 Signal List

Table 2-29: Signal list

Pin No.	Signal name	Function
1	U	Motor winding ø U
2	V	Motor winding ø V
3	W	Motor winding ø W
5	R+	External regeneration resistor terminal
6	R-	External regeneration resistor terminal
7	SE+	External regeneration resistor thermal sensor input*
8	SE-	External regeneration resistor thermal sensor input*

* Short these pins if external regeneration resistor is not in use. If they remain open, the alarm of "over heat" occurs.)

⚠ *Danger : Do not connect or disconnect the connector when the power of the Driver Unit is on.*

⚠ *Danger : A high voltage is applied to the connector after the power is turned on. Take extra care for short circuit.*

⚠ *Danger : Check the orientation of the connector when inserting it. Though the connector is lock type, be sure to insert it to the bottom. Otherwise you cannot secure the connector.*

⚠ *Danger : A high voltage remains between the pins R+ and R- even after the main power is turned off. Be careful not to get an electric shock.*

⚠ *Danger : Operate the lever on both sides slowly when disconnecting the connector.*

2.13. CN5: Connector for Power Supply

- The connectors for CN5 are shown in the Table 2-30: Connector list

Table 2-30: Connector list

Connector of Driver Unit	PHOENIX CONTACT	MSTBA2,5/5-G-5,08-LR or equivalent
Mating connector	PHOENIX CONTACT	FKC 2,5/5-ST-5,08-LR or equivalent

2.13.1. CN5 Pin-Out

Fig 2-45: Pin-out

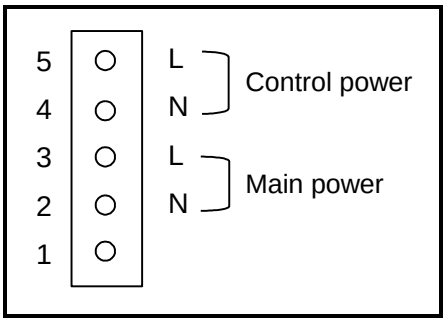

2.13.2. CN5 Wiring Diagram

Fig 2-46: Wiring diagram

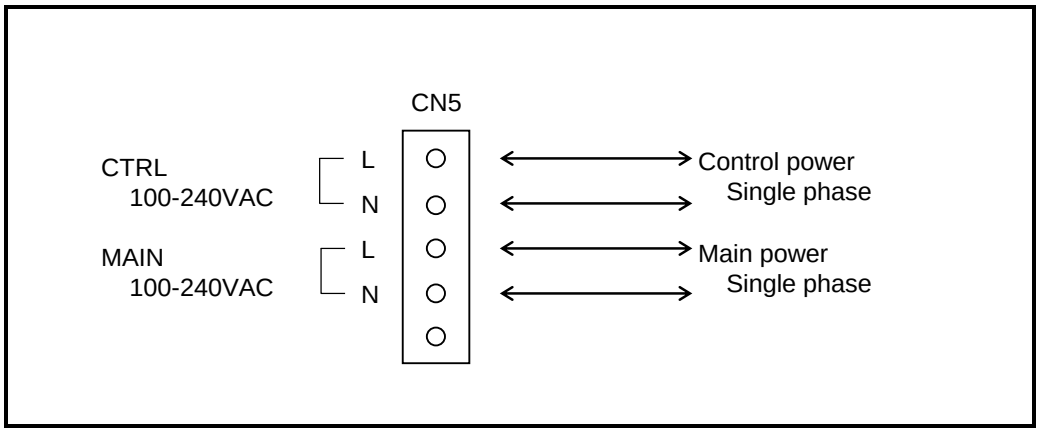

⚠ *Danger : Do not connect or disconnect the connector when the cable is energized.*

⚠ *Danger : A high voltage is applied to the connector after the power is turned on. Take extra care for short circuit.*

⚠ *Danger : Check the orientation of the connector when inserting it. Though the connector is lock type, be sure to insert it to the bottom. Otherwise you cannot secure the connector.*

⚠ *Danger : A high voltage remains even after the main power is turned off. Be careful not to get an electric shock.*

⚠ *Danger : Operate the lever on both sides slowly when disconnecting the connector.*

3. Unpacking, Installation and Wiring

3.1. Unpacking

3.1.1. Receiving Check

- Make sure you have received the following units.
  1) Megatorque Motor
  2) Driver Unit
  3) Cable Set (Motor and Resolver cable)

3.1.2. Motor and Driver Unit Model EDD Combinations

⚠ *Caution : Confirm that the reference number of the Motor and the Driver Unit on each nameplate matches each other in the following codes: Motor series and size, and maximum torque.*

Fig 3-1: Indication on the nameplate of Motor

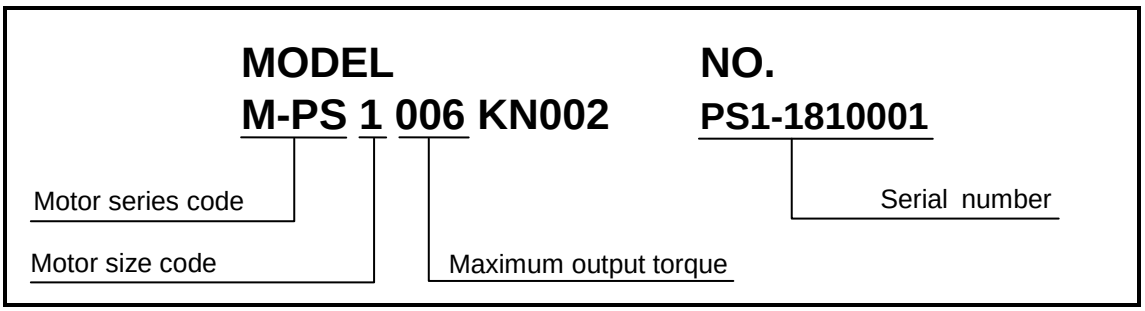

Fig 3-2: Indication on the nameplate of Driver Unit

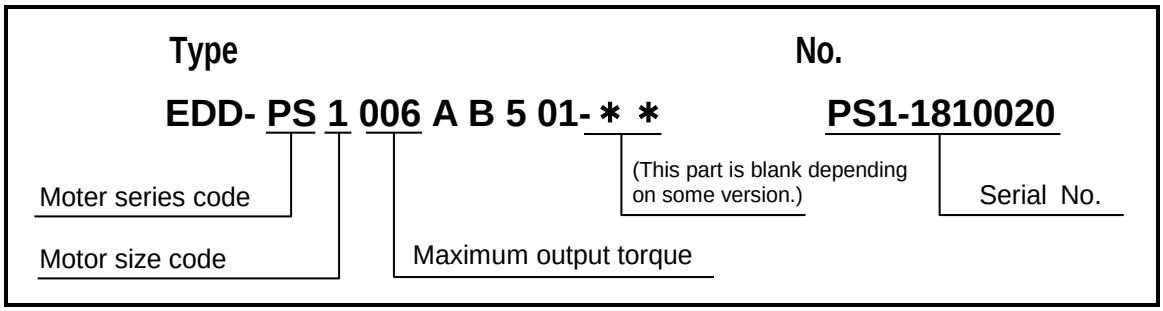

3.2. Installation

3.2.1. Motor Mounting

- Please follow the notes described below to make full use of the capabilities of the Megatorque Motor, a highly capable DD (direct drive) motor series.

3.2.1.1. Environmental Conditions of Motor

- Use the Motor in the indoor condition free from corrosive gas.
- The operating ambient temperature for the Motor shall be 0 to 40[°C].
- The PS/PN/PX series Megatorque Motor is neither dust-proof nor waterproof. (IP30 equivalent)
  Do not expose the Motor to water or oil from any source.

3.2.1.2. Motor Installation

- Install and secure the Motor on a rigid base, otherwise mechanical vibrations may occur.

⚠ *Warning : Mount the Motor using the tapped holes of the bottom of the Motor or mounting holes of the Motor mounting base.*

- The mounting surface flatness should be 0.02 [mm] or less.
- The Motor can be installed either horizontally or vertically.
- The bolt tightening torque and screw insertion depth should be as follows.

Table 3-1: Bolt tightening torque and screw insertion depth

Motor type	PS1 series	PS3 series	PX3 series	
Bolt hole	M4	M6	Fixed surface A(M6)	Fixed surface B(M5)
Tightening torque [N·m]	3.4 or less	13 or less	14 or less	9.0 or less
Screw insertion depth [mm]	4 to 5.5	7 to 8.5	7 to 8.5	6 to 7.5

Table 3-2: Bolt tightening torque and screw insertion depth

Motor type	PN2 series	PN3 series	PN4 series
Tightening torque [N·m]	5.3 to 6.5	7.8 or less	20 or less
Screw insertion depth [mm]	5 to 6.5	6 to 7.5	10 to 11.5

⚠ *Caution : For the PX3050 Motor, use either fixed surface A or fixed surface B as the installation surface.*

⚠ *Caution : When using fixed surface A as the installation surface, set the mating width of ø78h8 to 3.5 [mm] or less.*

- Refer to "Fig 2-27: PX3050 type Motor" for the fixed surface of the PX3 series Motor

Fig 3-3: Mounting Motor

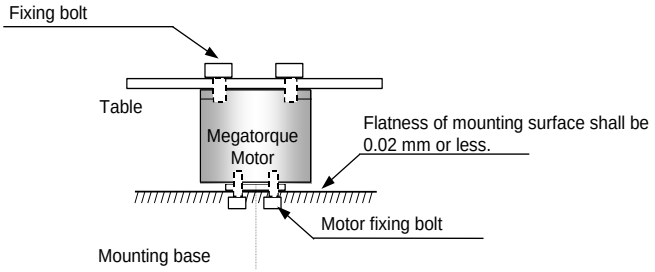

Note: If the motor is installed as indicated in the figure below, mechanical vibrations will be generated and the velocity loop proportional gain(VG)cannot be increased. It will occur overshoot and the motor can not operate smoothly.

- Attach the load directly to the Motor rotor.
- Mount the motor directly to the base.

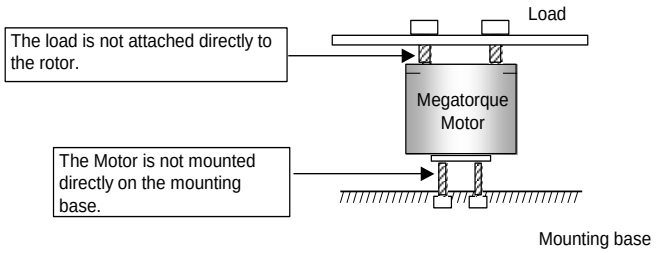

⚠ *Caution : The bend radius of the motor cable lead and the resolver cable lead should be R30 [mm] or more.*
Do not use the leads of the motor cable and the resolver cable with flexing motion.

3.2.1.3. Coupling Load to Motor

⚠ *Caution : When you use pin holes on the rotor (output axis) of PS3 Motor, follow the notes below.*

- Set the tolerance quality of locating pin diameter for running fit.
- Do not apply excessive force or shock to the Motor when inserting a locating pin.
- The function of the pinholes is simply to adjust the position of a mating part with the Motor. Do not use the pinholes to lock the mating part (load).

⚠ *Warning : Fix the load using the bolt-holes of the rotor. Take a great care for play between the rotor and the load.*

- The following are the maximum tightening torque of fixing bolts

Table 3-3: Bolt tightening torque and screw insertion depth

Motor type	PS1 series	PS3 series	PN2012	PN3045	PN4135	PN4180	PX3050
Tightening torque [N·m]	3.4 or less	7.8 or less	5.3 to 6.5	7.8 or less	20 or less	20 or less	4.4 or less
Screw insertion depth [mm]	5 to 6.5	7 to 8.5	5 to 6.5	6 to 7.5	10 to 11.5	10 to 11.5	7 to 8.5

3.2.1.4. Confirmation of Use Conditions

- The load moment of inertia is generally much bigger than the rotor moment of inertia in the Megatorque Motor System. Recommended load moment of inertia of each Motor size is shown in the "Table 3-4: Recommended load moment of inertia of Megatorque Motor".

Table 3-4: Recommended load moment of inertia of Megatorque Motor

Motor type	Rotor moment of inertia [kg·m^2]	Recommended load moment of inertia [kg·m^2]
PS1004	0.0023	0.15 to 0.23
PS1006	0.0024	0.015 to 0.24
PS1012	0.0031	0.03 to 0.31
PS1018	0.0038	0.03 to 0.38
PS3015	0.011	0 to 1.1
PS3030	0.014	0 to 1.4
PS3060	0.019	0.12 to 1.9
PS3090	0.024	0.12 to 2.4
PN2012	0.0024	0.02 to 0.24
PN3045	0.011	0.11 to 0.77
PN4135	0.057	0.57 to 3.99
PN4180	0.065	0.65 to 4.55
PX3050	0.0028	0.0028 to 0.28

⚠ *Warning : Check if the use conditions exceed the allowable axial load and the allowable moment load of the Motor.*

- Refer to "2.5. Motor Specifications" for the allowable axial load, allowable radial load and the allowable moment load.

3.2.1.5. Dummy Inertia

- For the full use of the benefits of the direct drive motor system, it is essential to maximize the resonance frequency of the whole mechanism by increasing the rigidity of the load, as well as securely fastening the Motor to a highly rigid mechanical system. Therefore, adding some dummy load to the rotor directly may help in the following cases.

  (1) A key is used to fix the load to the rotor because the load cannot be directly attached to the rotor.

  (2) The load is directly fixed to the rotor. However, vibration occurs due to torsional deflection on the rotary axis of the load.

  (3) Inertia of the whole mechanism is very low when a thin shaft such as a ball screw shaft is attached.

  (4) There exists play because a sprocket chain or a gear train is used.

- Inertia of a dummy load shall be approximately 20% of the load moment of inertia.
  When a speed reducer mechanism is used, it shall be

  $GD^2_1/(r^2 \times GD^2_d) \leq 5$

  Where GD^2_1 = inertia of indirectly connected load, GD^2_d = inertia of directly attached load, and r = reduction ratio.)

Fig 3-4: Example of dummy load

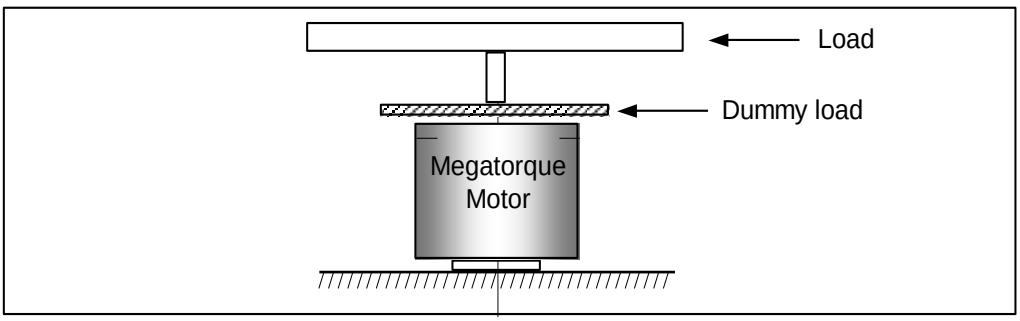

3.2.2. Installation of Driver Unit

- The Driver Unit Model EDD must be fixed so that fins are in the vertical position for natural air-cooling.

⚠ *Caution : (1) Ambient temperature*

- Ambient temperatures should be in a range from 0 to 50 [[°C]]. The Driver Unit cannot be used in excess of 50 [[°C]]. A sufficient space of at least 100 [mm] should be provided both above and below the Driver Unit in a control cabinet. Operate the Driver Unit in an environment in which internally generated heat can be dissipated. If heat is trapped above the Driver Unit, open the space above it to allow for the heat to dissipate (in this case, also take steps to prevent the entry of dust) or provide a forced air cooling system.

(2) Dust-proof • Waterproof

- Use the Driver Unit in a control cabinet with IP54 or higher. Protect the Driver Unit from exposure to oil mist, cutting water, cutting dust, coating gas, etc., to prevent their entry into the Driver Unit through ventilation openings, which may cause circuit failure.
- IP code is specified in the IEC standard and classifies the protection level of enclosures from the solid contaminant and water.
- Explanation of IP54:
  Code 5: Dust-proof (protection against external solid contaminant)
  Code 4: Waterproof (must not be affected by water splash in any direction.)

⚠ *Caution : When installing two or more Driver Units for multi-axis combinations, provide a 10 mm or more space between adjacent Driver Units.*

- Maintain inside temperature of the enclosure into which the Driver Unit is installed between 0 to 50[°C]. If the alarm P0 (Over heat) occurs frequently, provide a forced cooling to the heatsink. Refer to "11. Alarm and Warning" for details.

- The Driver Unit Model EDD can be attached to a panel using front mounting brackets (optional).

- The maximum power loss of the Driver Unit Model EDD is 60 W.

Fig 3-5: Installation of Driver Unit

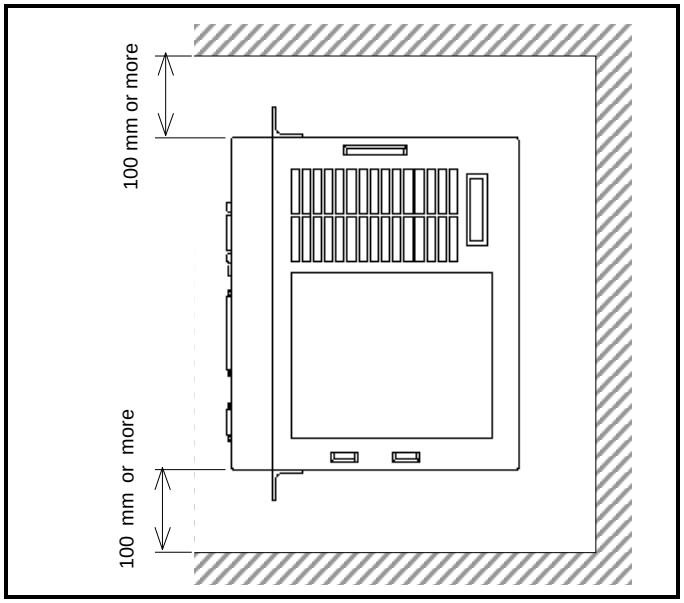

3.3. Wiring

3.3.1. Connection of Cable Set

⚠ *Caution : Do not cut the Motor cable to change the length shorter or longer or do not hook it up to other cable. You need to separately purchase the cable with specified length.*
The standard cable length is available in 1, 2, 3, 4, 5, 6, 8, 10, 15, 20 and 30 meters.

⚠ *Caution : Do not place the power lines (AC main power and Motor cable) and the signal lines in close proximity. Do not tie wrap them and not to put in the same duct or conduit.*

⚠ *Caution : When considerable vibrations are applied to the cable, fix the cable near the connector so that no stress is applied to the connector part.*

Fig 3-6: Connection of cable set

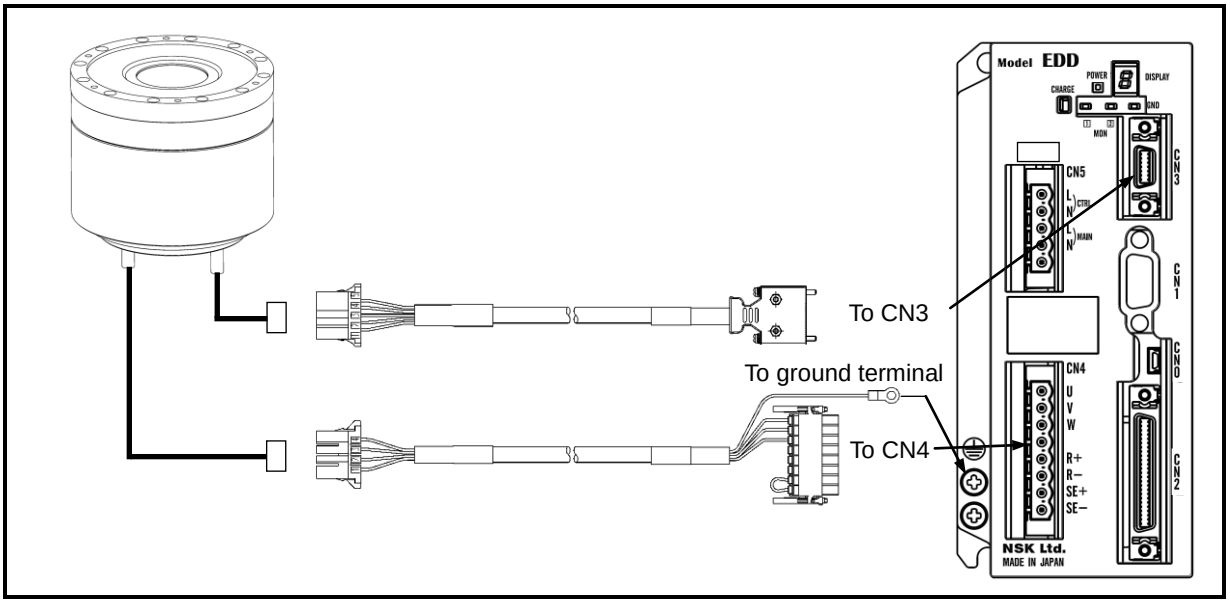

3.3.2. Connecting Power

- Refer to "2.13. CN5: Connector for Power Supply" for details.
- Use AWG18 of anti-heat vinyl UL cables for the power supply.
- Do not place the main power AC line cable and the signal wires in close proximity. Do not tie wrap them, and do not put them in the same duct or conduit.
- Separate the wiring of the primary and the secondary noise filters, and take different routing.
- The Driver Unit and the noise filters shall be close to each other.
- Be sure to install the surge killer circuit to the coils of magnetic switch, relay and solenoid. Refer to catalogs of each manufacturer for more details.
- An inrush current is generated when the power is turned on because of the capacitive load connected to the main power supply circuit. For this reason, use the contacts such as a magnetic switch that has a higher rated current as shown below.

Table 3-5: Noise filter requirement [Reference only][Recommended manufacturer: Schaffner]

Power source	Type	Rated voltage	Rated current
Single phase 100 to 240 [VAC]	FN2070-10	250 [VAC]	10 [A]

Table 3-6: Capacity of circuit breaker for power supply

Contacts	Rated current
Non-fuse breaker	15 A
Short circuit breaker	15 A, Sensitivity: 15 mA
Magnetic switch	15 A

Table 3-7: Inrush current

Item	Inrush current (Typical)		Time
	At power supply 100 [VAC]	At power supply 200 [VAC]	
Control power	7.5 A	15 A	10 msec
Main power	10 A	20 A	10 msec

Table 3-8: Leakage current

Leakage current (Typical)
1.4 [mArms] (40 to 100 [Hz])

⚠ *Caution : Do not lose the screws of the ground terminal when wiring the connector.*

- Refer to "Table 3-7: Inrush current" for wiring the power.

3.3.3. Ground Connection

- For grounding the Driver Unit, use braided copper cable or heavy gage cable as possible such as AWG12 or larger.
- The ground terminal is M4 screw. There is a possibility that the thread of a screw is damaged when the tightening torque of the screw exceeds maximum value 1.2N・m.

⚠ *Caution : Ground the Motor separately when it is isolated from the machine into which it is installed.*

⚠ *Warning : All the ground lines must be connected at one point and the grounding resistance shall be 100 Ω or less.*

Fig 3-7: Wiring example of power supply

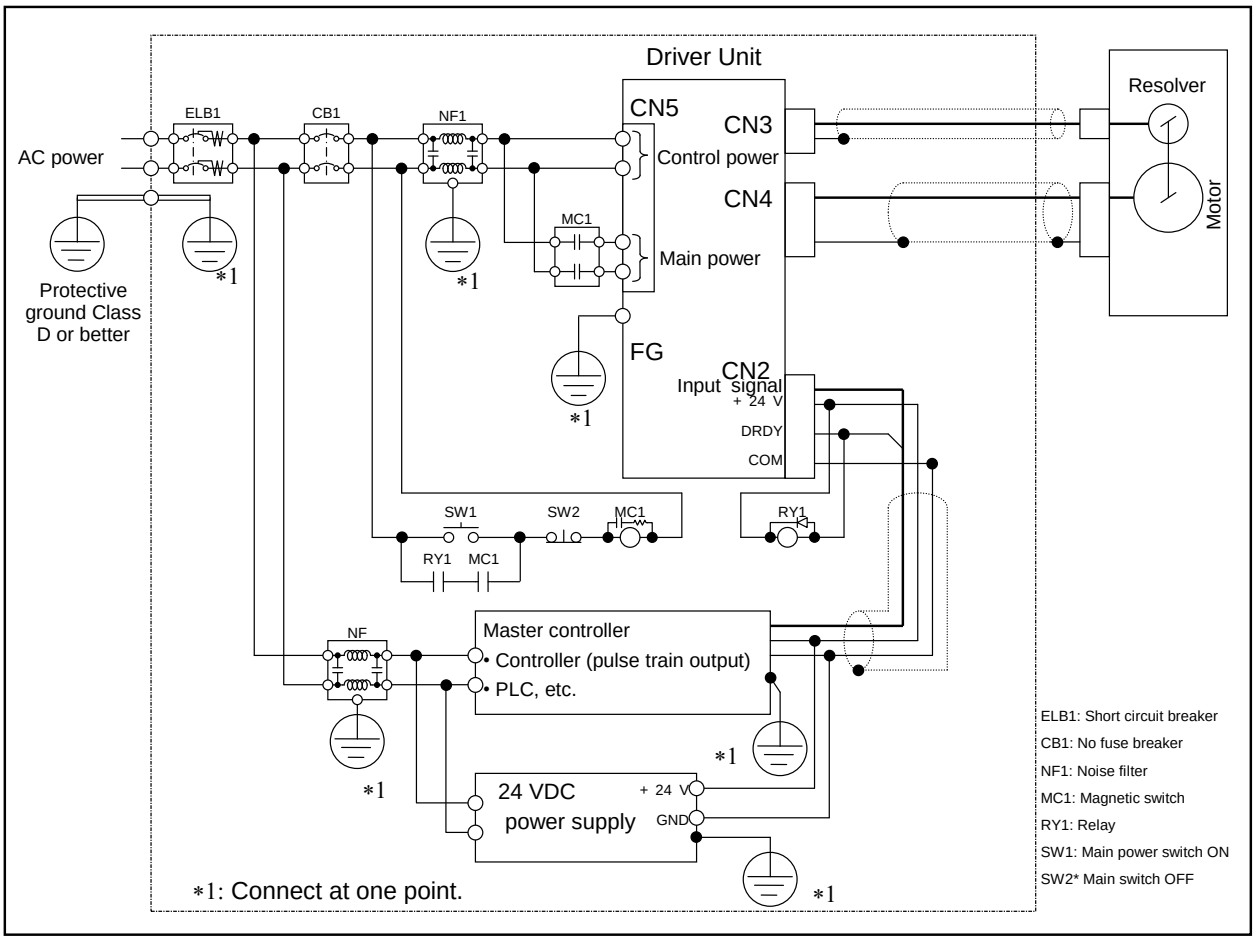

⚠ *Caution : We recommend the noise filter below for compliance with the EMC Directive.*

- FN2070-10/06 (Schaffner EMC Ltd.) or equivalent.
  (Use a breaker compatible with the European Safety Directives.)

⚠ *Caution : Provide a circuit to shut down the main power by the output of an alarm.*

- When an alarm occurs, the output DRDY (Driver Unit ready) of the connector CN2 opens.

- The Driver Unit gives the warning P5 (Main AC line low voltage) when the main power is turned off while the servo is on.

  ◊ Refer to "7.1.4. Servo on: SVON" for turning on and off of the main power.

  ◊ Input of ACLR (Alarm clear) signal, the command CL (Alarm clear), or turning on the control power again will clear the alarm.

3.3.4. Connector Wiring

⚠ *Caution : Be sure to install a surge killer circuit when inductive switches such as relays are used.*

⚠ *Caution : When inputting the inputs "Over travel limit, + direction" and "Over travel limit, - direction," connect the outputs of your sensors directly to the inputs, not via the master controller. (Those connectors are shown as* *in Fig 3-8 below.)*

3.3.4.1. Wiring Example (CN2)

Fig 3-8: CN2 wiring example

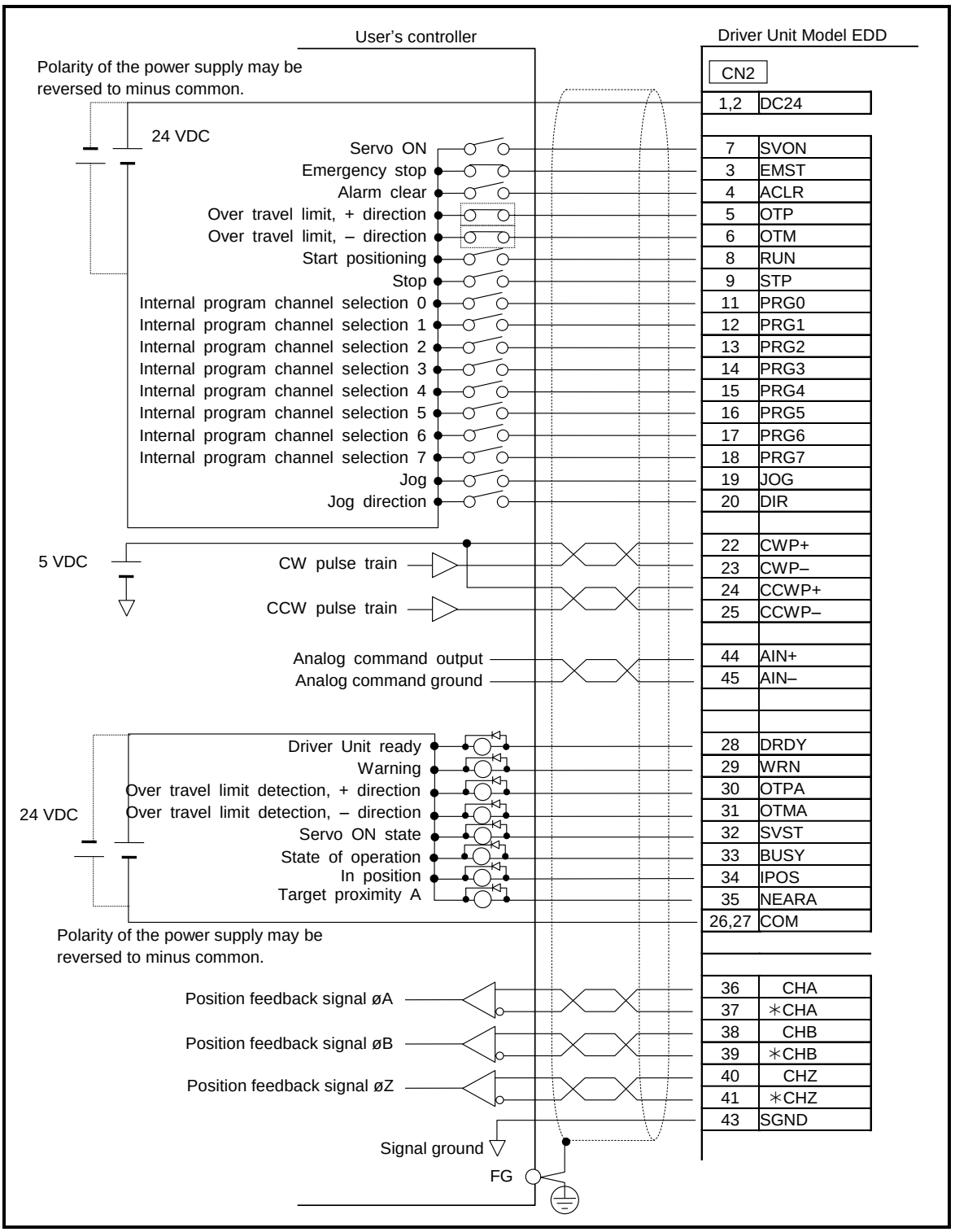

3.4. Turning on Main Power

3.4.1. Precautions Before Power-on

⚠ *Danger : The operator shall be out of the Motor motion range.*

⚠ *Danger : There shall be no mechanical interference when the Motor makes a full turn*

⚠ *Warning : The Motor must be securely fastened to the machine base.*

⚠ *Warning : The load (work) must be securely fastened to the Motor.*

⚠ *Caution : Before turning on the power check the following. Improper connection may result in breakage of the Driver Unit.*

(1) Connections of each cable.

(2) Connection of the Handy Terminal

(3) Confirm the safe conditions.

⚠ *Caution : Turn on the power when the Motor is stationary. Otherwise the System cannot detect the position coordinates and the alarm A1 (Absolute position error) occurs.*

3.4.2. Points to be Checked When Power-on

(1) Turn on the power and confirm that the LED on the front panel indicates the normal state of the System.

Fig 3-9: When error occurs

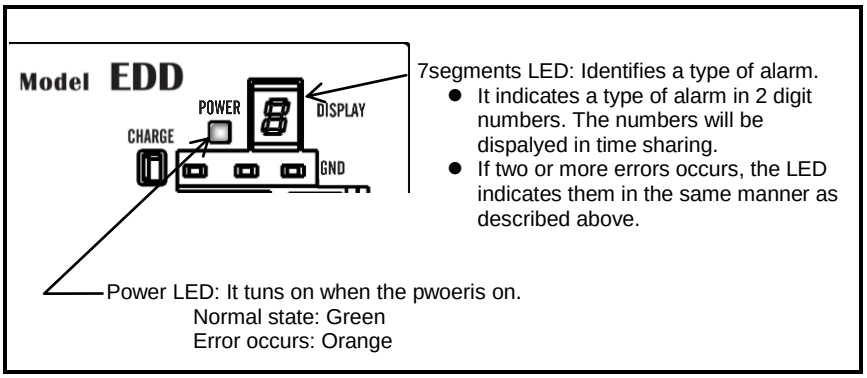

Fig 3-10: In normal state

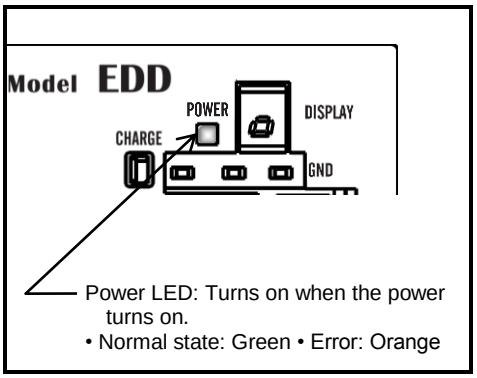

(2) Check if the Emergency stop (CN2, pin #3: EMST) input is effective.

• When the emergency stop input is ON, the 7 segments LED on the front panel indicates the alarm code in the order of F → 4. If not, refer to "11. Alarm and Warning"

⚠ *Warning : The shipping set of the EMST input (EMST) is a normally closed contact. If it is not connected, the alarm F4 (Emergency stop) occurs. Wire the EMST circuit or change the polarity to a normally open contact referring to "3.4.3. Polarity Setting of Control Input Port" to clear the alarm.*

⚠ *Warning : The shipping set of the inputs OTP and OTM (Over travel limit) are the normally closed contact. It will cause an alarm if they are not connected. Wire them or change the polarity to the normally open contact referring to "3.4.3.Polarity Setting of Control Input Port" to clear the alarm.*

(3) The System is in the normal state when the display of the Handy Terminal shows the prompt ": (colon)" after the message of "NSK MEGATORQUE."

Fig 3-11: Indication of the display of the Handy Terminal

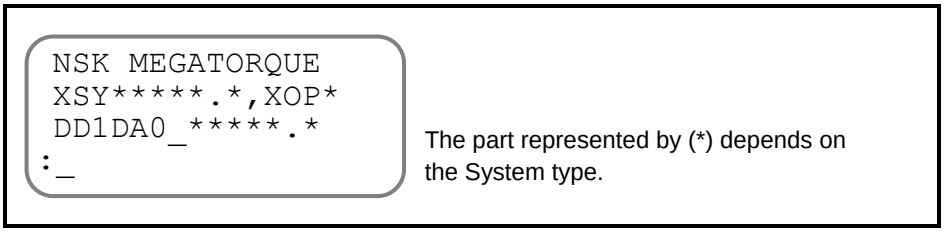

3.4.3. Polarity Setting of Control Input Port (Normally Open Contact and Normally Closed Contact)

- The shipping set of the inputs EMST, OTP, and OTM of the CN2 connector is the normally closed contact. The following show how to change the polarity of the above inputs to the normally open contact.

⚠ *Caution : You cannot change the polarity of a control input port when the Motor servo is on. Be sure the servo is off when changing the polarity.*

◊ Input the command MO (Motor off) to turn the Motor servo off.

M O ENT

```
:MO
:_
```

- The following describe how to change the polarity of EMST input to the normally open contact.

(1) Input the command PI0.

P I 0 ? ENT

```
:PI0
 FNEMST;
```

(2) Following the indication of the command FN (Input function), an input of the space key will show the NW (Anti-chattering timer) and the AB (Input polarity), and the prompt "? " will appear.

SP SP

```
 FNEMST;
 AB1;
 NW0.2
?_
```

- On the terminal screen of EDD MEGATERM, space key operation is unnecessary. After operation (1), operate (3).

(3) Input the command AB0. Input "ENT" after the prompt "?".

A B 0 ? ENT

ENT

```
?AB0
?
:
```

Thus the input EMST (Emergency stop) has been changed to the normally open contact.

(4) Turn on the Motor servo on by inputting the command SV (Servo-on).

S V ENT

```
:SV
:_
```

- Input the command PI2 to change the polarity of the input OTP (Travel limit, + direction) to the normally open contact, and then follow the same procedures above.
- Input the command PI3 to change the polarity of the input OTM (Travel limit, - direction) to the normally open contact, and then follow the same procedures above.

3.4.4. Power on and Servo on

1) Turn on the power.
2) The System checks the output DRDY approximately three seconds later.
3) If the System is in the normal state, turn on the input SVON. The System gets in the Servo ON state.
   ◊ If the System does not output the DRDY signal normally, take appropriate measures referring to "11. Alarm and Warning."
4) The output SVST (Servo state) closes when the Motor servo is on.
5) Then input a necessary operation command.

Fig 3-12: Flow of Power on and Servo on

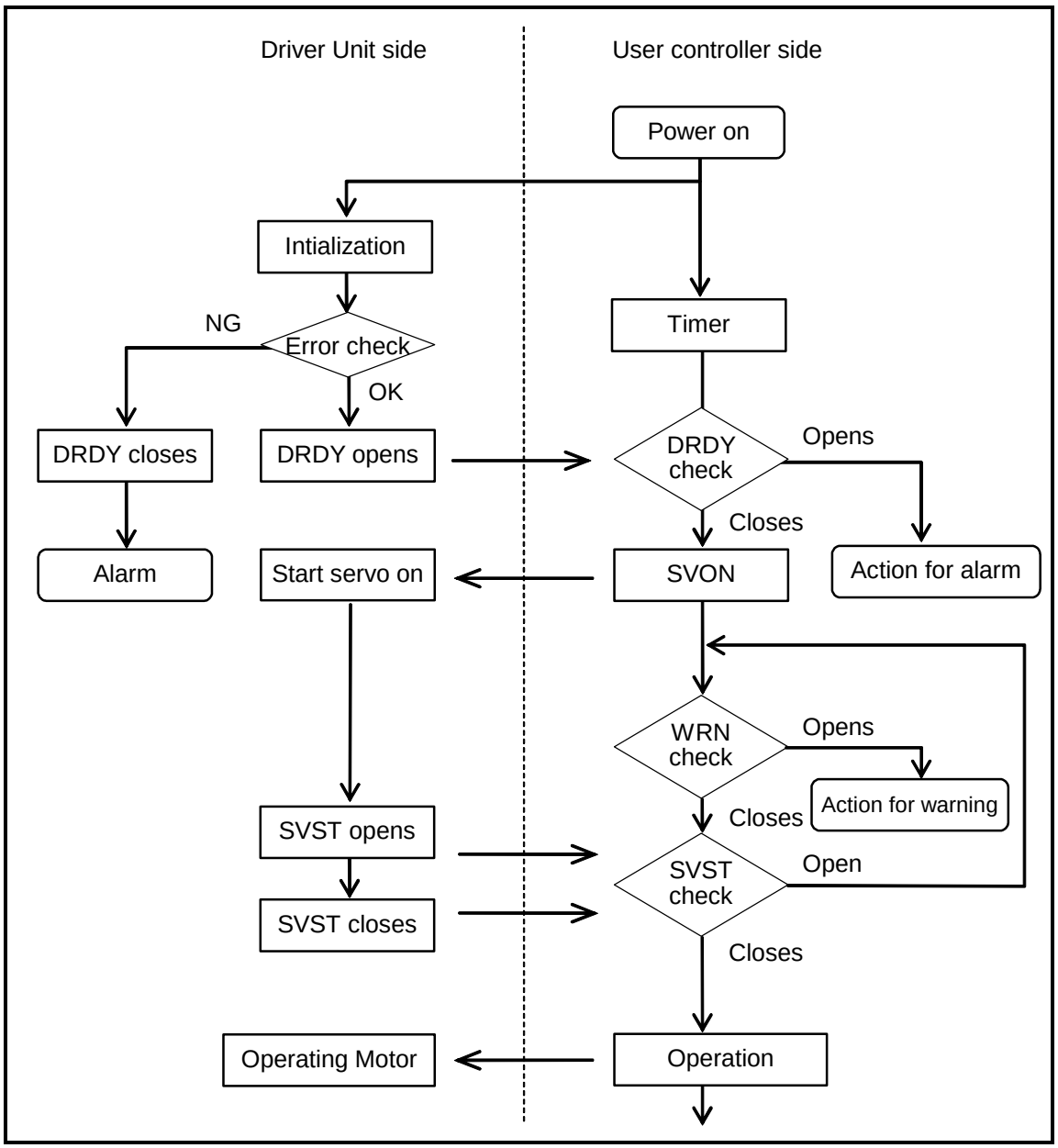

Fig 3-13: Signal timing for Power on and Servo on

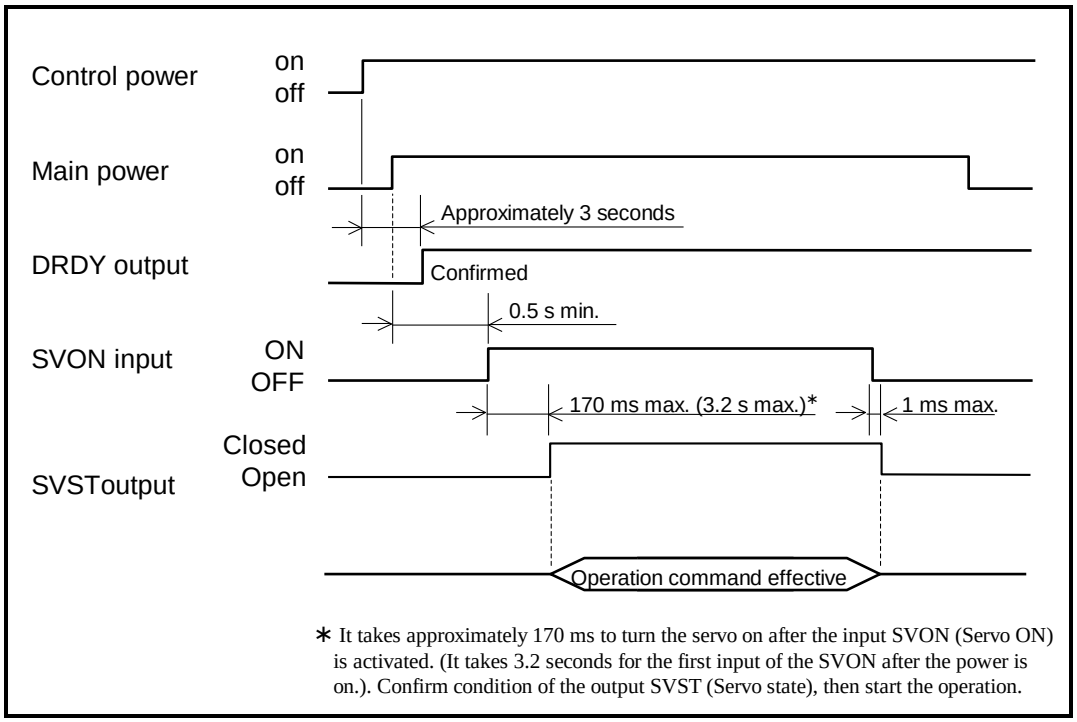

* It takes approximately 170 ms to turn the servo on after the input SVON (Servo ON) is activated. (It takes 3.2 seconds for the first input of the SVON after the power is on.). Confirm condition of the output SVST (Servo state), then start the operation.

⚠ *Caution : Turn on the input SVON after the main power is on. Turn off the input SVON before the main power is off. If the main power is off leaving the SVON input ON, the Warning P5 (Main power under voltage) occurs.*

- Refer to "7.1.4. Servo on: SVON" for turning on and off of the main power.
- Input of the input ACLR (Alarm clear), the command CL (Clear alarm), or turning on the power again will clear the warning.

⚠ *Caution : The cogging torque is generated because a permanent magnet is built into this motor. Therefore, rotors might move slightly at servo off and the power-off.*

- The cogging torque is magnetic suck power generated when the rotor is moved while non-excited.

4. RS-232C Communication and USB Communication

The Driver Unit Model EDD has RS-232C communication and USB communication ports, and setting parameters, programming and various monitoring can be done by the following methods.

- Entry method using the Handy Terminal by RS-232C communication
- Entry method using the EDD MEGATERM by USB communication

4.1. RS-232C Communication (Handy Terminal Communication)

◆ Function of Handy Terminal

- Monitoring the Motor conditions, internal channel programming and setting parameters with the RS-232C communication interface can be done easily by connecting the FHT31 Handy Terminal to connector CN1 of the Driver Unit Model EDD. (No setting such as baud rate is required.)

⚠ *Caution : When connecting or disconnecting the communication cable (CN1), be sure that the power of the Driver Unit is turned off.*

◆ Appearance and function of each part

Fig 4-1: Handy Terminal M-FHT31

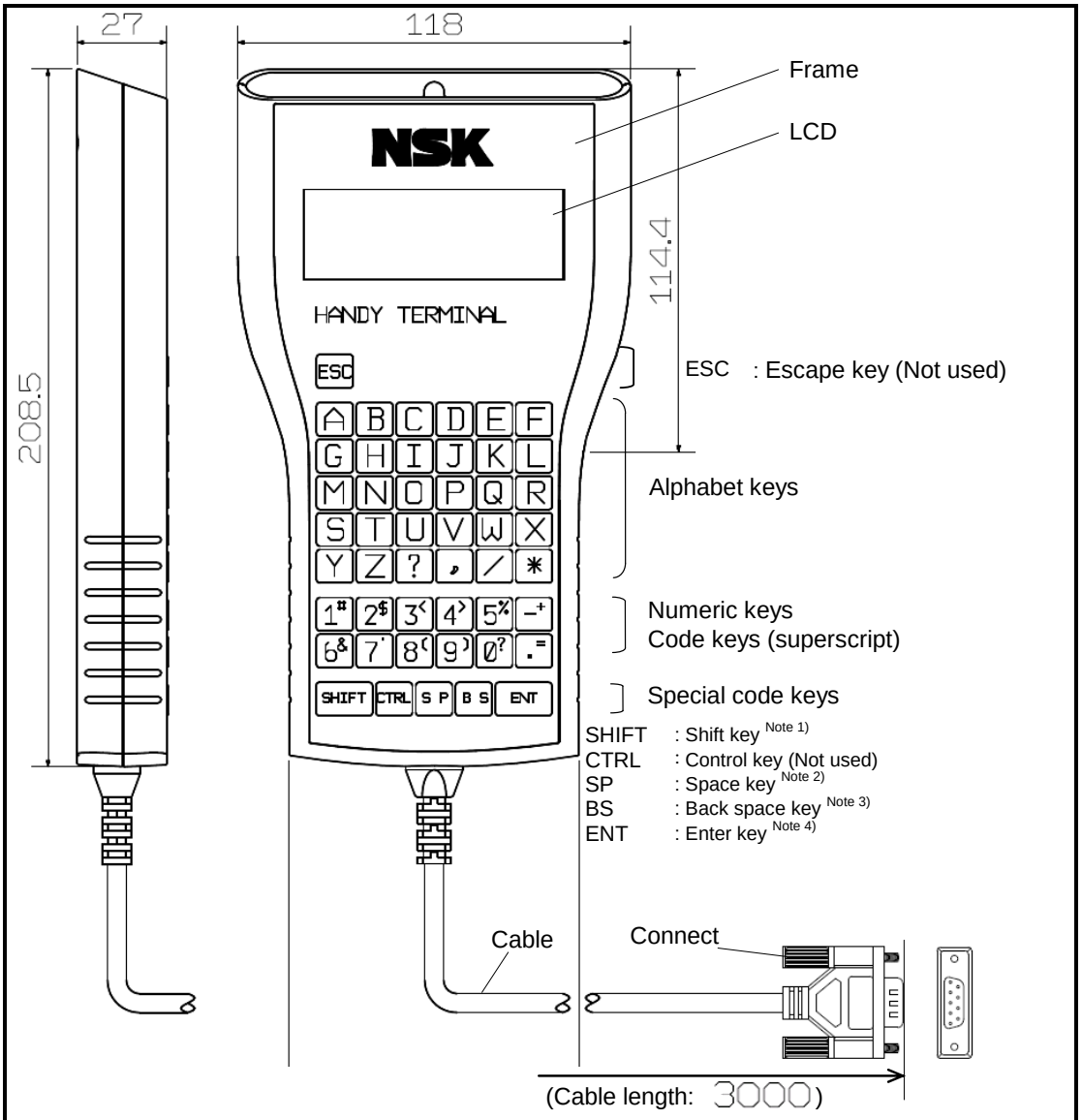

Note: 1) SHIFT: Press a numeric key while pressing the SHIFT key to enter a code key. A superscript of the numeric keys will be entered.
2) SP: Use this key to input a blank between letters.
3) BS: Press the BS key when correcting logged in mistakes.
4) ENT: Press the key at the end of a command or the parameter setting.

4.1.1. Check on Handy Terminal

- Follow the procedure below to check the handy Terminal if it is functioning.

  1) Connect the Handy Terminal to the connector CN1 of the Driver Unit Model EDD, and then turn on the power.

  2) Be sure that the colon (:) is on the display. (Press the ENT key once if the colon is not on the display.)

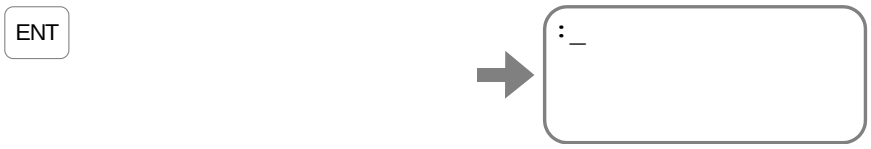

4.1.2. Setting Parameters

- Following example describes how to check, and change the current setting of parameter MV (Motor velocity).

  1) Check the current setting of parameter MV.
  Enter as **?** + **Parameter code** as follows.

  2) Set the parameter MV to 0.5 [s^{-1}]
  Enter as **Parameter code** + **data**.

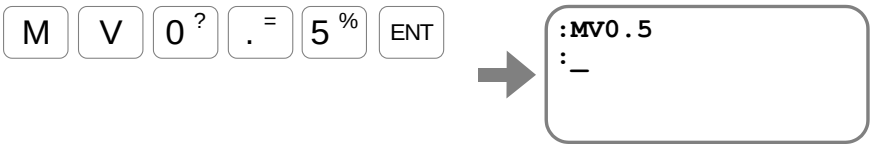

  This completes the setting when the colon (:) appears on the screen.

⚠ *Caution : Confirm that the colon (:) is on the screen when turning off the power of the Driver Unit after the setting of parameters.*

- Otherwise the alarm E2 "ROM error" may occur when the power is on next time.

4.1.2.1. Input of the Password

- Several parameters and commands require an entry of the password for setting and execution.

  1) Enter the Password (/NSK ON)

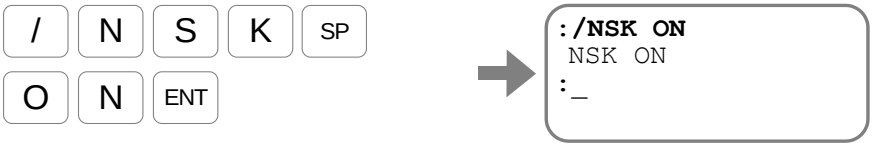

  The acknowledgment appears on the screen, and the colon appears indicating the normal stand-by state for command entry. Then set a parameter or a command.

- However, the password is effective for only one entry of a parameter or a command.

4.1.2.2. Reset to Shipping Set

- You may reset a parameter, which has been altered once, to the shipping set. Though the command of initialization resets all parameters to the shipping set at once, this section describes the way to rest parameters to the shipping set one by one.

- The following example describes how to reset the parameter MV (Motor velocity) to the shipping set. Enter as **Parameter code** + **/RS**.

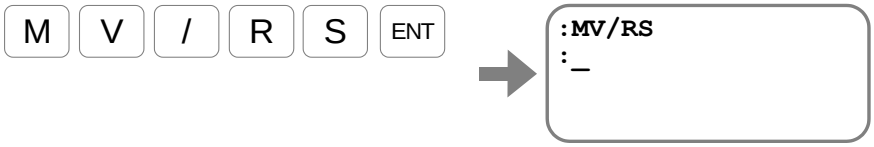

4.1.3. Readout of Parameter

- The following example describes how to read out the parameter VG (Velocity gain).

1) Check the current setting of the parameter VG.
Enter **?** + **Parameter code** as

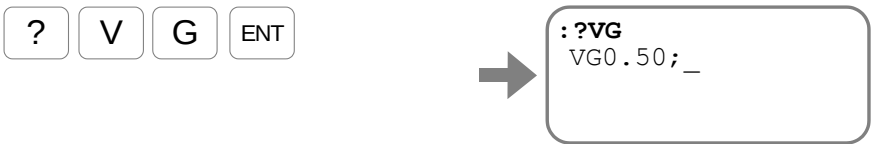

The current setting of the VG is displayed and the prompt ";" (semicolon) is on the bottom line.

2) An input of the SP key reads out the next parameter while the prompt is ";"(semicolon).

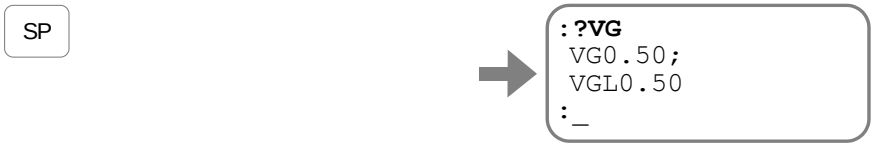

When all parameters with the code VG have read out, the prompt changes to ":" (colon).
Input the BS key to abort the readout.

4.1.3.1. Monitoring Parameters by a Group

- There are many parameters for the Driver Unit. The command TS (Tell settings) will read out parameter values by groups.
  - ◊ Refer to "9. Details of Command and Parameter" for the detail of the command TS.

- The following example describes how to read out the setting of parameter VG for the velocity loop proportional gain (velocity gain).

1) The parameter VG belongs to a group of TS1 as described on "9. Details of Command and Parameter." Thus enter as:

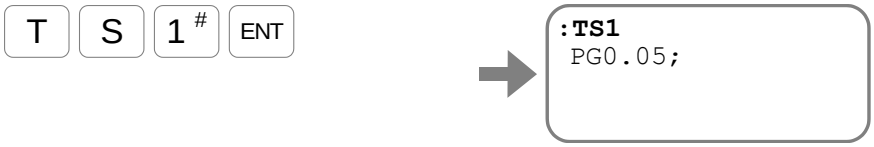

The screen will firstly show the setting of the parameter PG for the position loop proportional gain.

2) Press the SP key to scroll the display until it spots the setting of the VG.

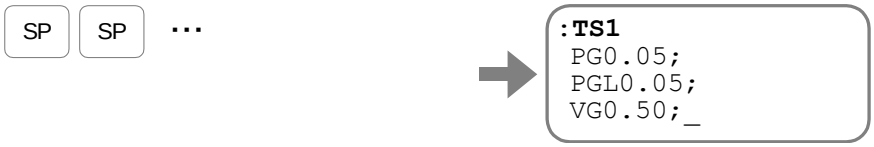

3) To terminate monitoring, keep pressing the SP key until the display stops scrolling, or enter the SP key. The colon will appear on the screen to indicate the completion of readout.

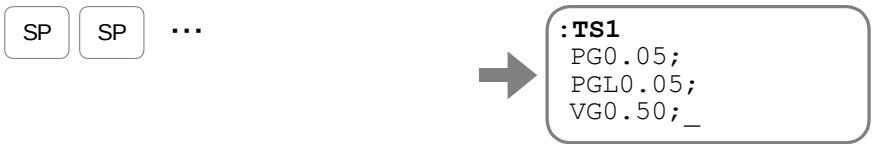

4.1.3.2. Monitoring Parameters Altered from Shipping Set

- When adjusting and setting parameters, you may read out parameter values only which have been altered from the shipping set.

- The command TS0 monitors all parameter values that belong to parameter groups of TS1 to TS13. Here, let's use the command TS (Tell settings) to read out the parameters which have been altered from the shipping set.
  - ◊ Among all parameters that can be read out by the command TS0, let's read out only the parameters whose setting have been altered from the shipping set.
    Enter as **TS** + **number** + **/MD**.

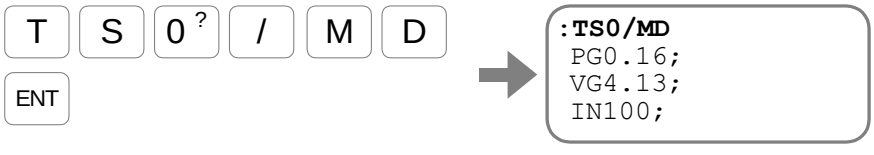

Every input of the SP key identifies the parameter whose setting has been altered from the shipping set. Press the BS key to abort the readout.

4.1.4. Monitoring the Current Status

- This function is useful when you need to monitor various conditions of the System in the middle of condition adjustment.

- The following example describes how to monitor the current position by the Monitor TP (Read out current position [in units of pulse]).

  1) Enter as **Monitor code** + **/RP**.

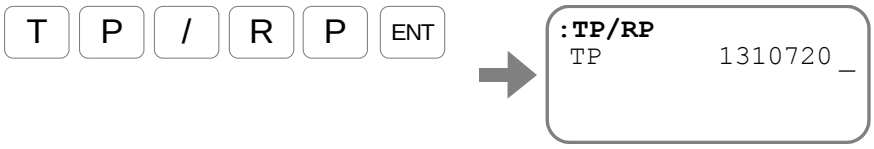

The current position is read out continuously. An input of the BS key will resume the readout and the prompt changes to ":" (colon).

4.1.4.1. Inputting a Command while Monitoring Multiple Conditions

- The following example describes how to monitor simultaneously the monitor TP (Monitor current position in units of pulse) and the monitor TV (Monitor current velocity). The function to monitor multiple conditions simultaneously is called "Multi-monitor."

  1) Input the monitor TP to the multi-monitor.
  Input as **Monitor code** + **/WW**.

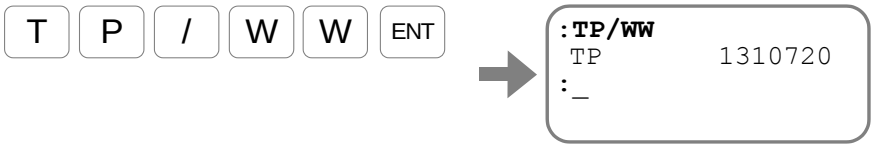

  2) And subsequently input the monitor TV.

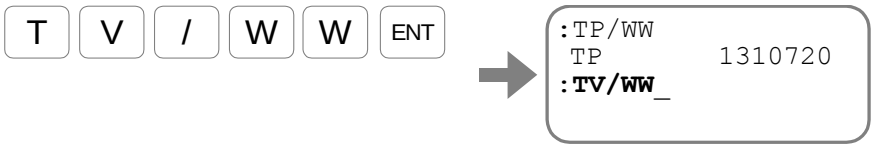

  3) Thus, two conditions can be monitored simultaneously. You may input the command in this state.

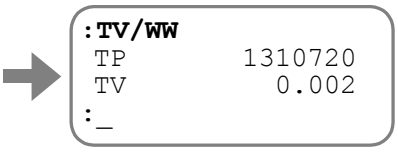

- Input the command WWC for cancellation of Multi-monitor.

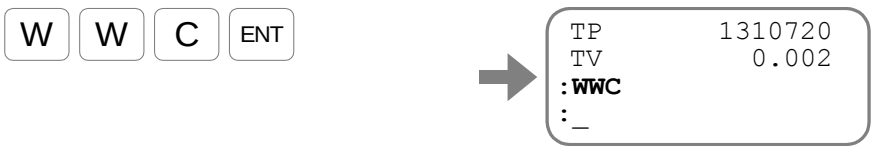

4.2. USB Communication (EDD MEGATERM)

◆ Function of EDD MEGATERM

- Use the application software "EDD MEGATERM" compatible with the Windows 7/10-based PC for USB communication.

- Setting parameters, programming and various monitoring by USB communication can be done easily by connecting CN0 of PC and the Driver Unit Model EDD with a USB cable. (No setting such as baud rate is required.)

⚠ *Caution : USB communication is dedicated for maintenance using the MEGATERM. Do not use it for normal operation.*

⚠ *Caution : The connection cable with PC should be a double shielded item of 3 m or less, and use USB mini-B for the connector on the Driver Unit side.*

⚠ *Caution : Depending on the usage environment, communication may be interrupted. In that case, mount the high frequency division type ferrite core with three turns on the Driver Unit side and PC side. (Refer to Appendix 8)*

⚠ *Caution : When USB communication and RS-232C communication are performed at the same time, USB communication is processed first, then RS-232C communication is processed.*

⚠ *Caution : All functions cannot be used even if USB communication is performed with USB communication software other than the EDD MEGATERM.*

Table 4-1: Specifications of USB communication

Item	Specification
Communication standard	USB 2.0 Full-Speed
Baud rate	12 [Mbps]

- The terminal screen of the EDD MEGATERM can be handled in the same way as the Handy Terminal, but some operation methods and displays are different. The difference between RS-232C communication and USB communication is described in this section.

- Use of the oscilloscope function and FFT function enables more visual tuning. When high-speed sampling is required, use an analog monitor. Refer to “5.5.2. Setting Notch Filter” for a method of measuring the monitor.

◆ Difference between Handy Terminal and EDD MEGATERM

- For the EDD MEGATERM, regardless of the setting of parameter MM: display mode switching, all responses of multiple lines on the terminal screen are displayed in batch (always MM0 state).
- According to the above, CH for channel editing command does not function such as editing/deleting of the middle line, and only the last line can be added. Avoid using the command, and use the channel editing screen.
- Likewise, since you cannot edit SP/AJ for operation pattern of demonstration operation, if you want to change it, create a dedicated operation pattern on the channel edit screen.

Fig 4-2: Channel editing screen of EDD MEGATERM

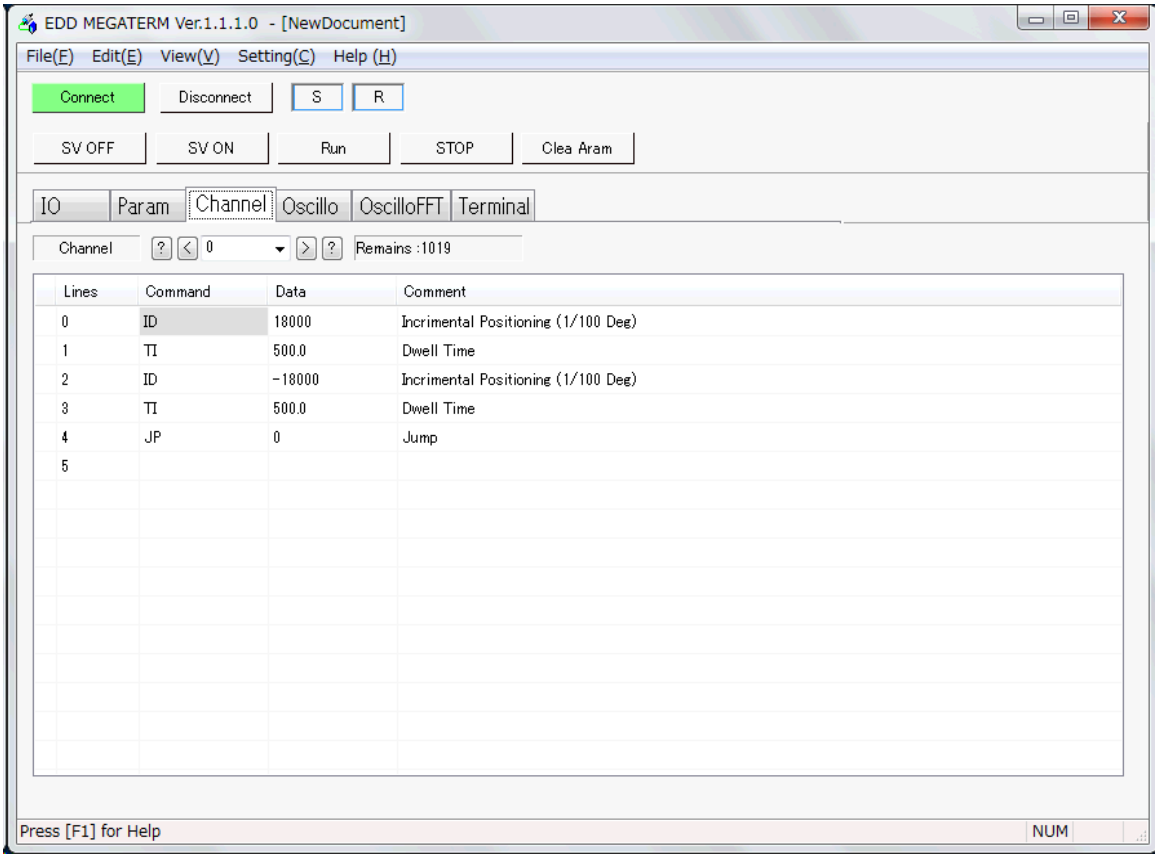

4.2.1. Setting Application Software

- First, set the application software "EDD MEGATERM" on the Windows 7/10-based PC.

  1) Download the application software "EDD MEGATERM" from the NSK website.

  2) Execute setup.exe in the downloaded folder to follow the instructions to install.

  3) Execute WinUSB.vbs in the downloaded folder and follow the instructions to install.

  4) Start the EDD MEGATERM in the menu Start Menu > All Programs > EDD MEGATERM Ver.X.X.X.

  ◊ For details, refer to readme.txt in the downloaded folder.

Fig 4-3: EDD MEGATERM startup screen

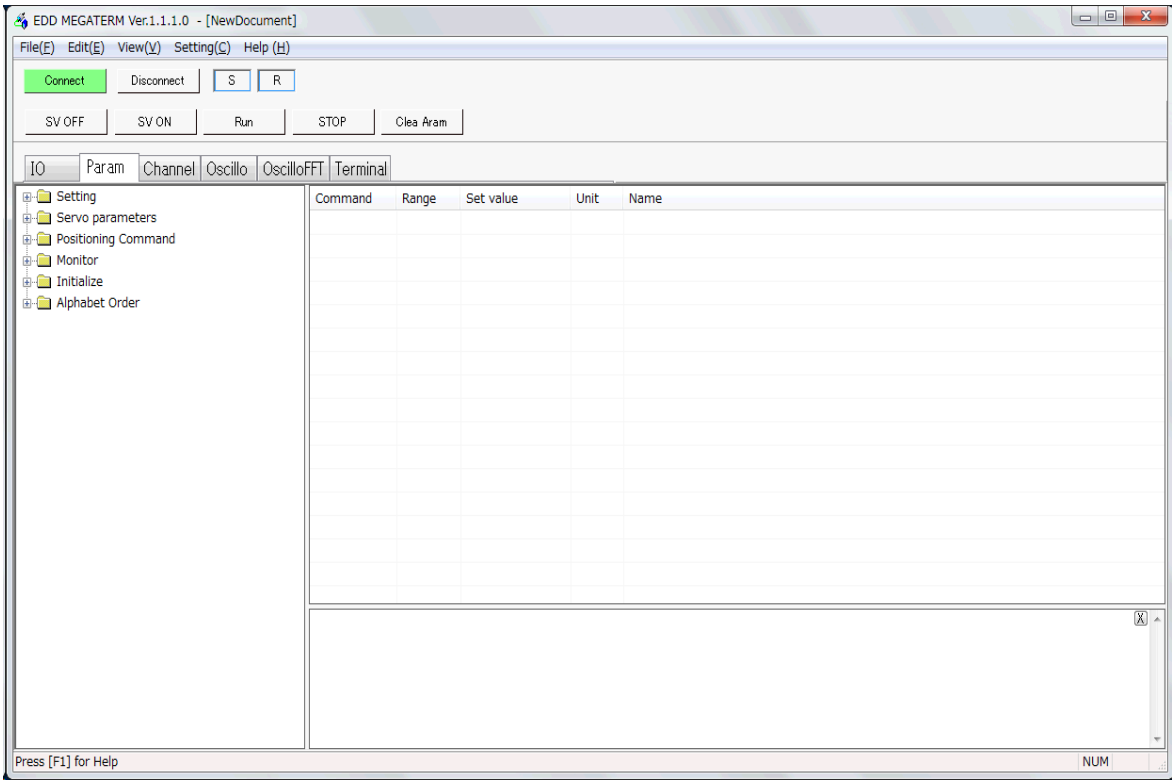

4.2.2. Establishing Communication

- First, start the EDD MEGATERM and establish communication to open the terminal screen.

1) Connect the USB cable to CN0 of the Driver Unit.
2) Press the Connect button on the EDD MEGATERM screen and check that the communication has been established as the Connect button turns green.

3) Select the Terminal tab and open the terminal screen.

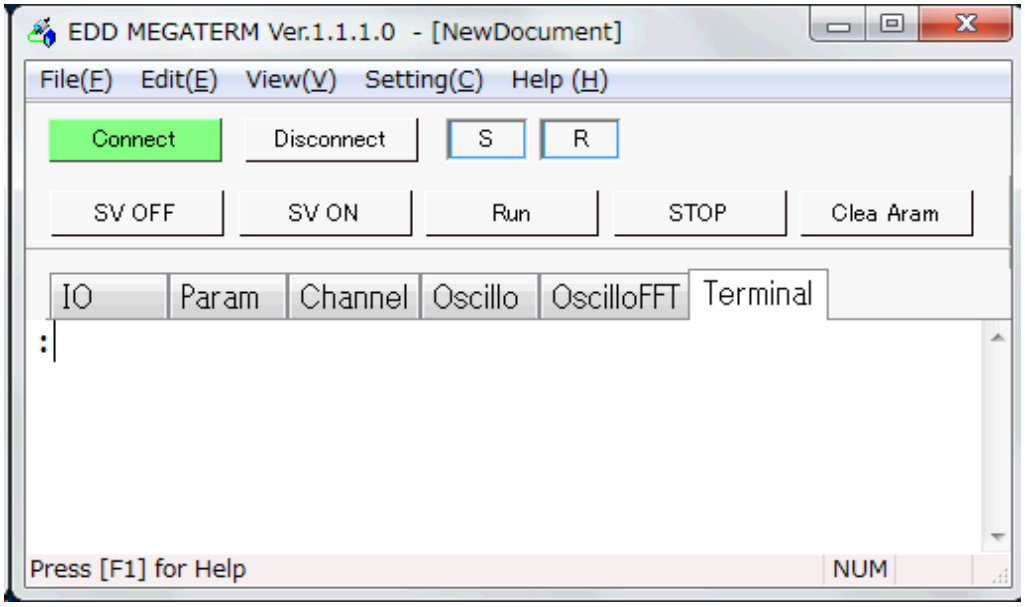

4.2.3. Setting Parameters

- Following example describes how to check, and change the current setting of parameter MV (Motor velocity).

1) Check the current setting of parameter MV.
Enter as **?** + **Parameter code** as follows.

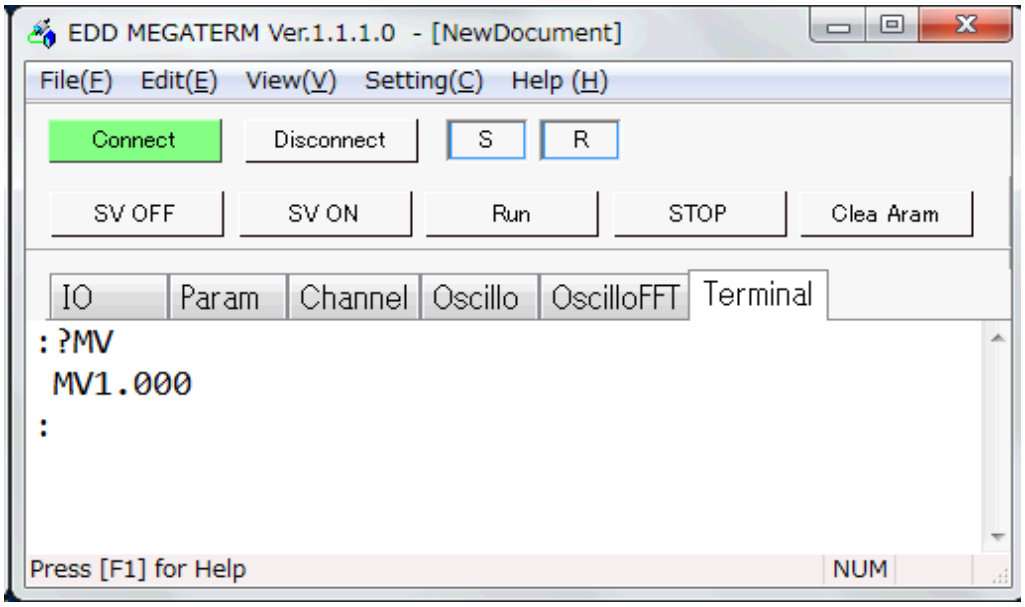

2) Set the parameter MV to 0.5 [s^{-1}]
Enter as **Parameter code** + **data**.

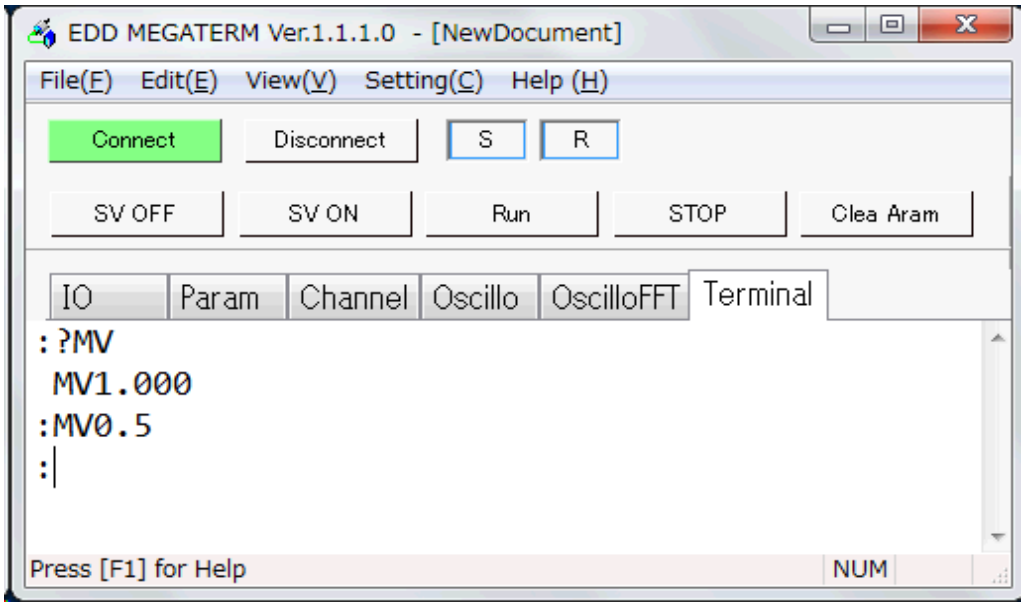

This completes the setting when the colon (:) appears on the screen.

⚠ *Caution : Confirm that the colon (:) is on the screen when turning off the power of the Driver Unit after the setting of parameters.*

- Otherwise the alarm E2 "ROM error" may occur when the power is on next time.

4.2.3.1. Input of the Password

- Several parameters and commands require an entry of the password for setting and execution.

1) Enter the Password (/NSK ON)

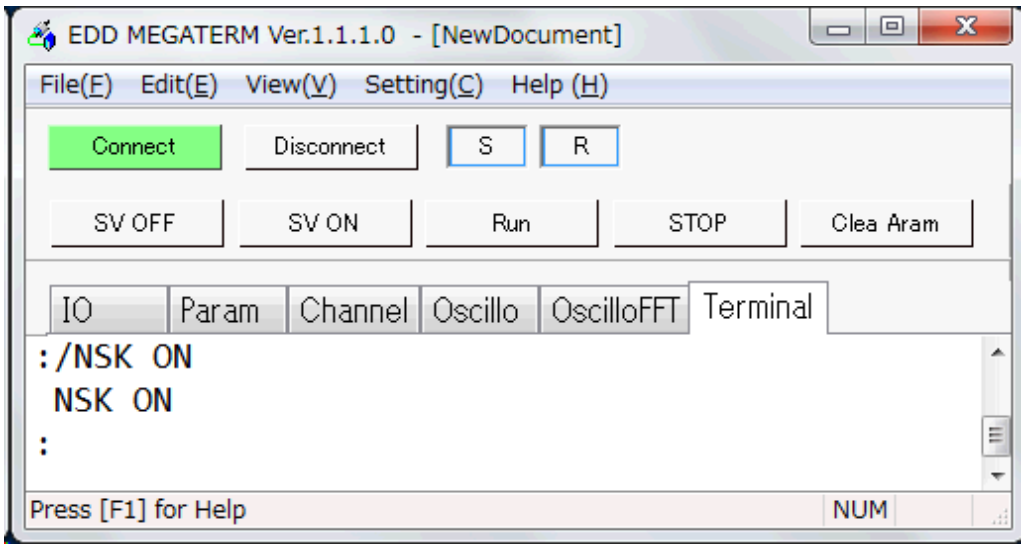

The acknowledgment appears on the screen, and the colon appears indicating the normal stand-by state for command entry. Then set a parameter or a command.

- However, the password is effective for only one entry of a parameter or a command.

4.2.3.2. Reset to Shipping Set

- You may reset a parameter, which has been altered once, to the shipping set. Though the command of initialization resets all parameters to the shipping set at once, this section describes the way to rest parameters to the shipping set one by one.

- The following example describes how to reset the parameter MV (Motor velocity) to the shipping set.

  1) Enter as Parameter code + /RS.

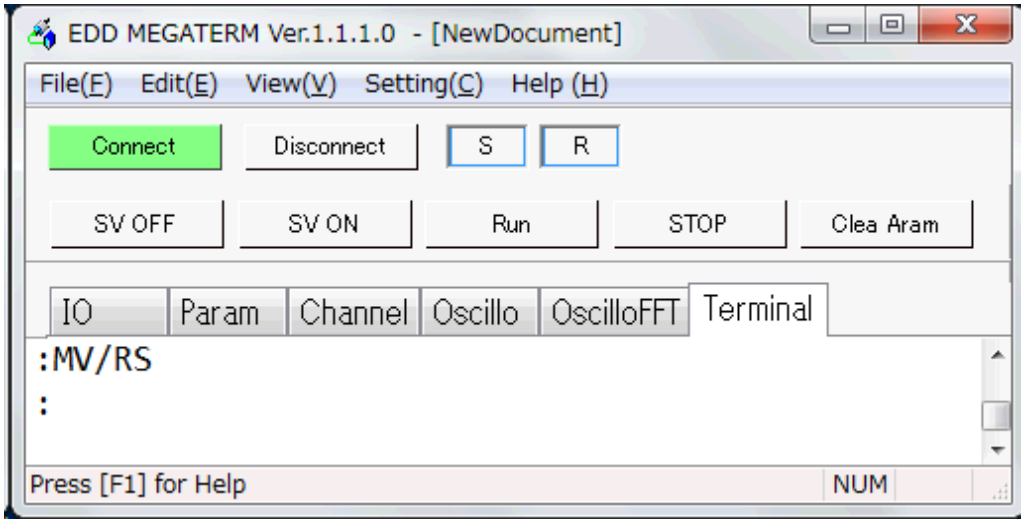

4.2.4. Readout of Parameter

- The following example describes how to read out the parameter VG (Velocity gain).

  1) Check the current setting of the parameter VG.
  Enter as **?** + **Parameter code**.

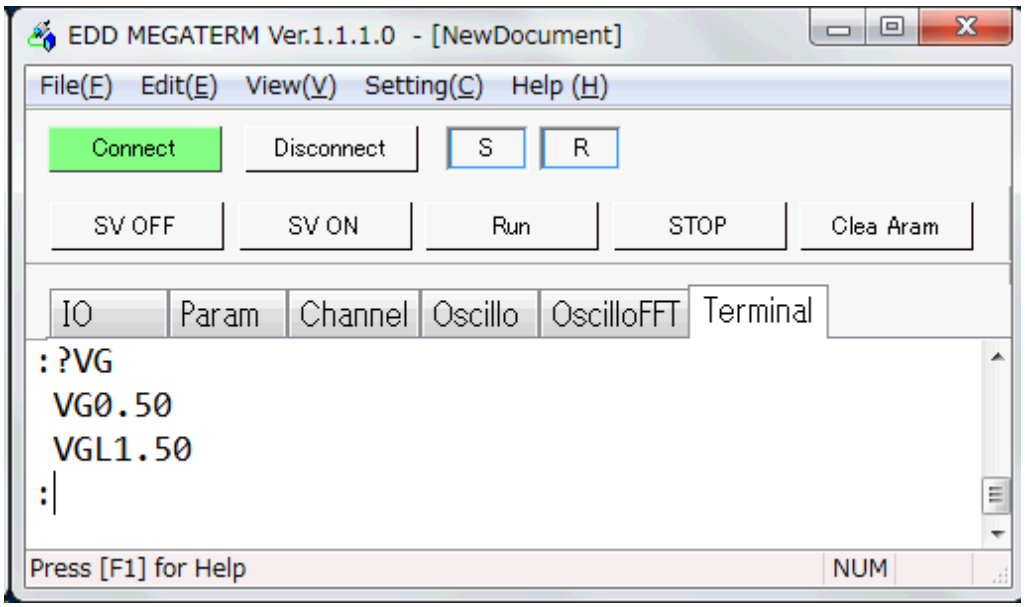

If all parameters including "VG" are read ahead of the parameter name, you will return to the prompt ":".

4.2.4.1. Monitoring Parameters by a Group

- There are many parameters for the Driver Unit. The command TS (Tell settings) will read out parameter values by groups.
  - ◊ Refer to "9. Details of Command and Parameter" for the detail of the command TS.

- The following example describes how to read out the setting of parameter VG for the velocity loop proportional gain (velocity gain).

1) The parameter VG belongs to a group of TS1 as described on "9. Details of Command and Parameter." Enter as **TS1**.

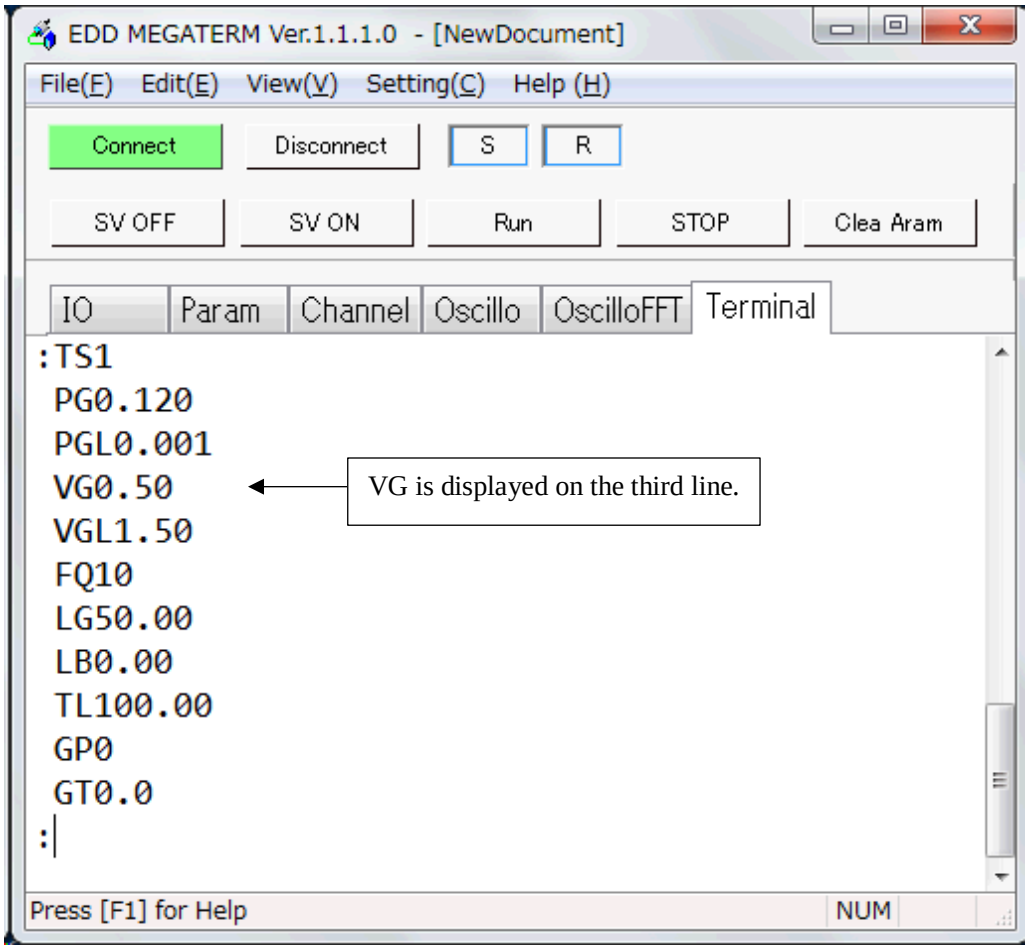

All the parameters belonging to TS1 and the prompt ":" will appear on the screen to indicate the completion of readout.

4.2.4.2. Monitoring Parameters Altered from Shipping Set

- When adjusting and setting parameters, you may read out parameter values only which have been altered from the shipping set.
- The command TS0 monitors all parameter values that belong to parameter groups of TS1 to TS13. Here, let's use the command TS (Tell settings) to read out the parameters which have been altered from the shipping set.

  ◊ Among all parameters that can be read out by the command TS0, let's read out only the parameters whose setting have been altered from the shipping set.
  Enter as **TS** + **number** + **/MD**.

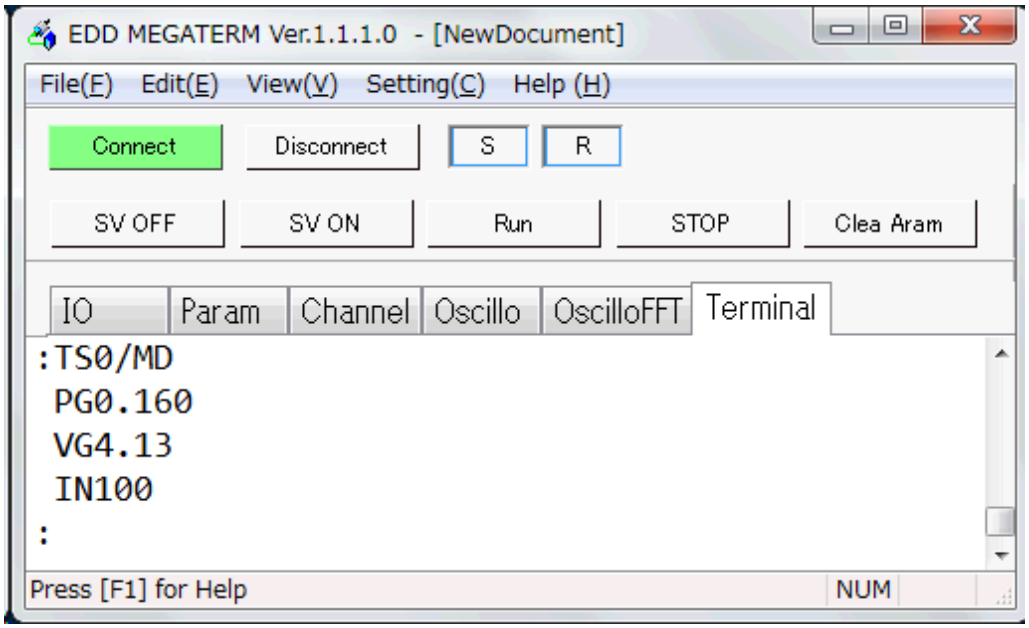

The parameters whose setting has been altered from the shipping set are identified. The prompt ":" (colon) will appear on the screen to indicate the completion of readout.

4.2.5. Monitoring the Current Status

- This function is useful when you need to monitor various conditions of the System in the middle of condition adjustment.
- The following example describes how to monitor the current position by the Monitor TP (Read out current position [in units of pulse]).

  ◊ Enter as **Monitor code** + **/RP**.

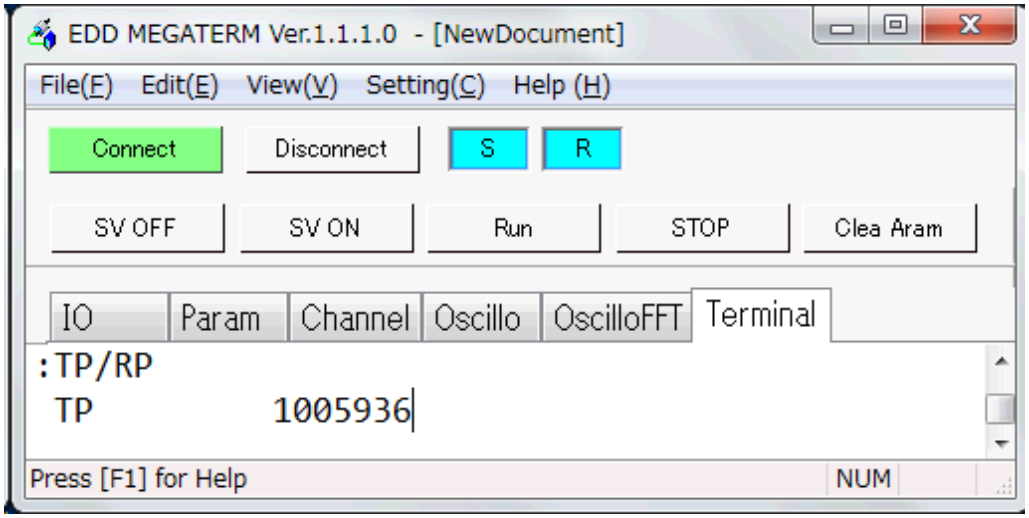

The current position is read out continuously. An input of the BS key will resume the readout and the prompt changes to ":" (colon).

4.2.5.1. Inputting a Command while Monitoring Multiple Conditions

- The following example describes how to monitor simultaneously the monitor TP (Monitor current position in units of pulse) and the monitor TV (Monitor current velocity). The function to monitor multiple conditions simultaneously is called "Multi-monitor."

1) Input the monitor TP to the multi-monitor.
Input as **Monitor code** + **/WW**.

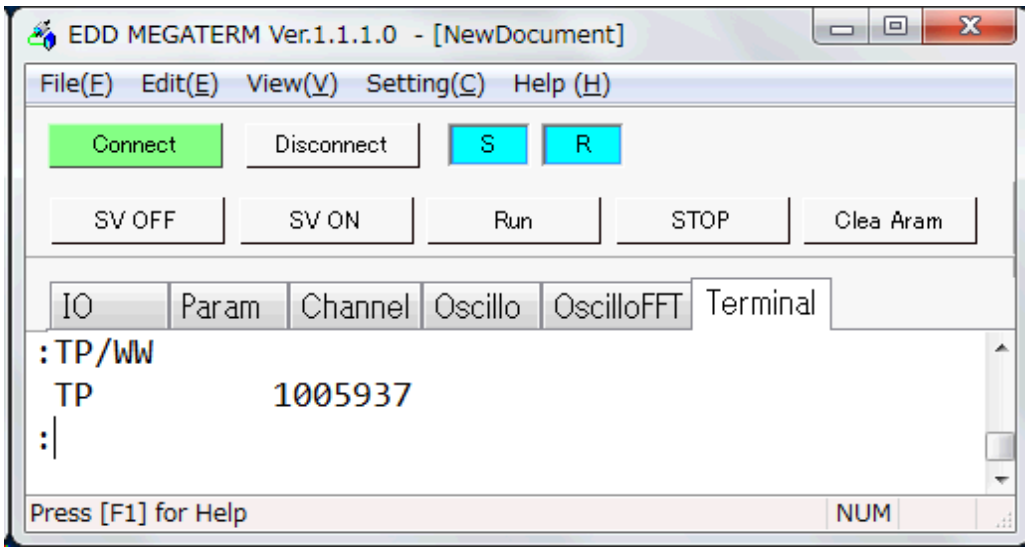

2) And subsequently input the monitor TV.

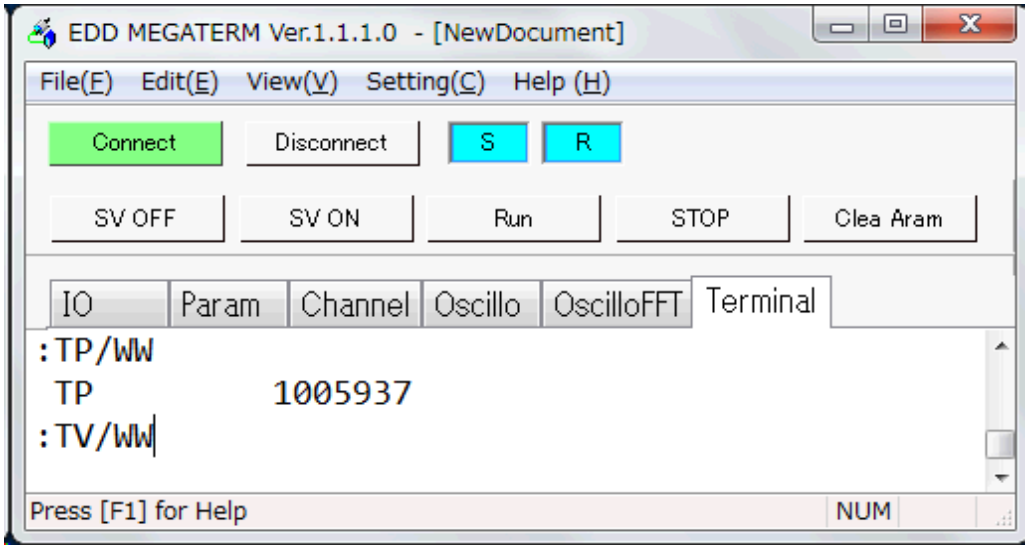

Thus, two conditions can be monitored simultaneously. You may input the command in this state.

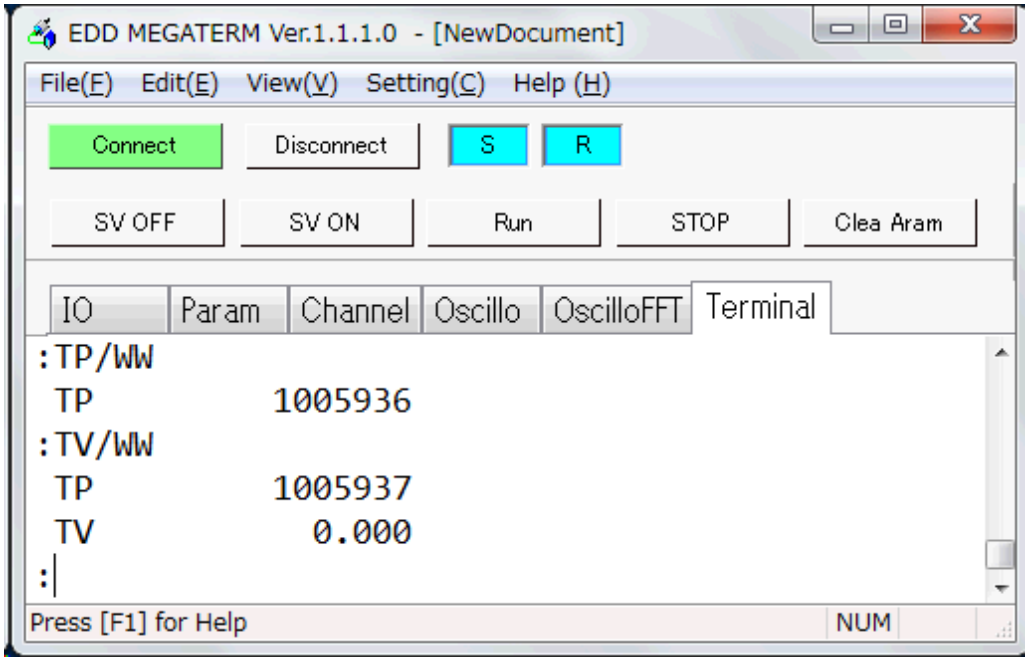

- Input the command WWC for cancellation of Multi-monitor.

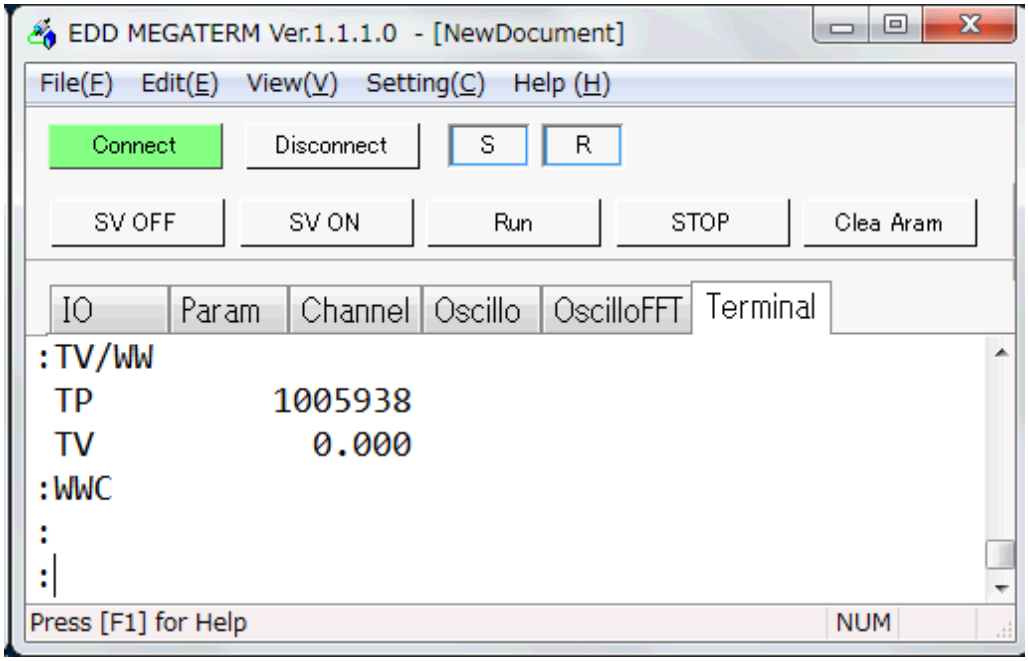

5. Tuning

- The proper gain adjustment is essential to make the full use of the capability of the Megatorque Motor System.

⚠ *Danger : Please adjust the servo parameter according to the procedure of this chapter. When a servo on is done without adjusting it, the motor might wear the hunting cap.*

5.1. Tuning Flowchart

Fig 5-1: Tuning Flowchart

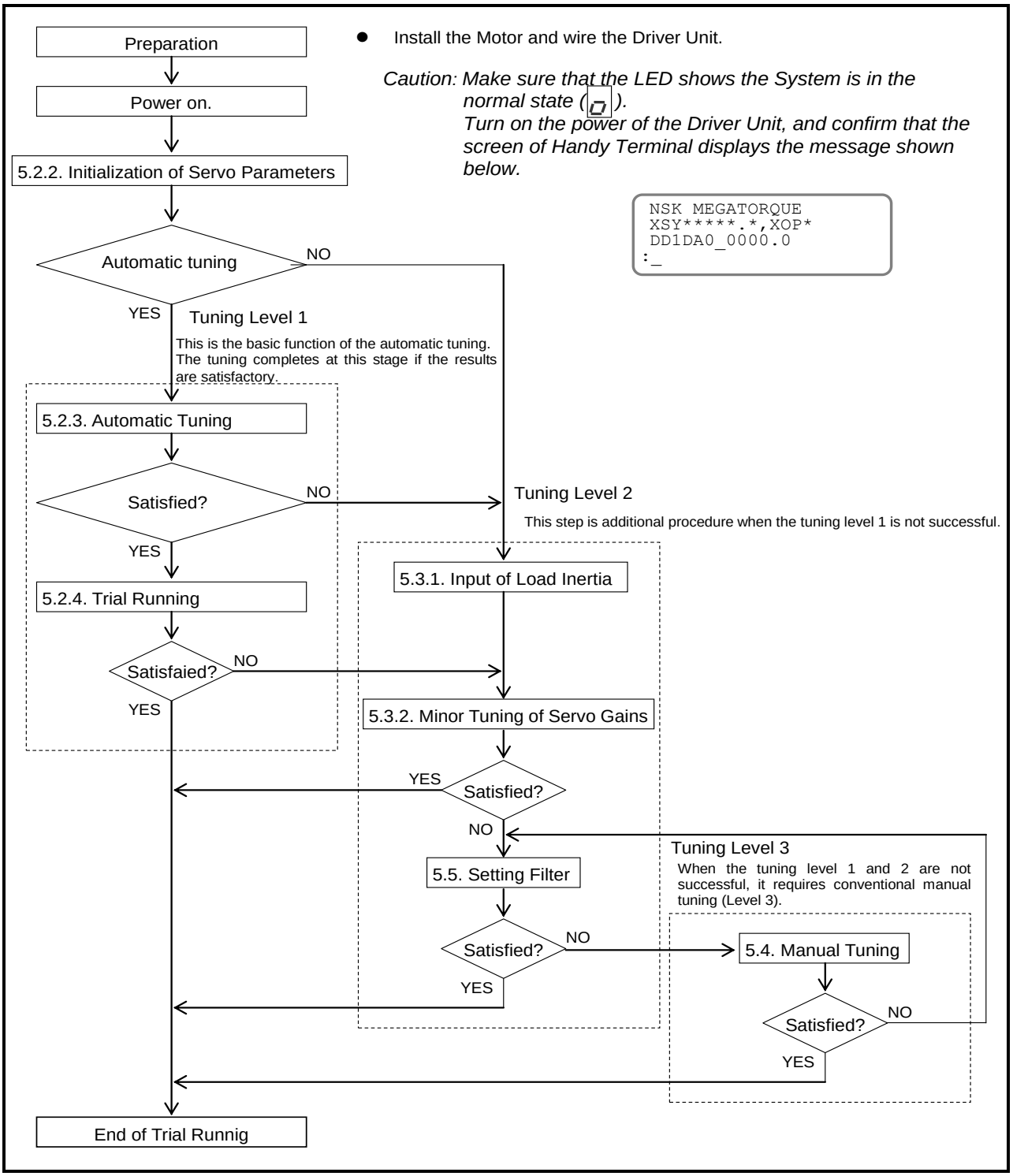

5.2. Tuning Level 1: Automatic Tuning

⚠ *Caution : The automatic tuning does not function if the following conditions are not met. Confirm them before carrying out the automatic tuning.*

- The load moment of inertia must be in the recommended range of the Motor. Refer to "3.2.1.4. Confirmation of Use Conditions."
- The Motor is set horizontally. (The load condition of the Motor must not be affected by external force such as the gravity.)
- Mechanical rigidity of the Motor mounting base and an attached load to the Motor is sufficient enough.
- There must be no backlash or play caused by gears or couplings.
- Frictional load to the Motor shall be minimal.

If the above conditions are not met, proceed to "5.3 Tuning Level 2: Servo Gain Tuning."

◆ Preparation

● You need to prepare the following for the automatic tuning.

◊ Installation of the Motor. (Refer to "3.2.1.2. Motor Installation.")

◊ Attach the load to the rotor of Motor. (Refer to "3.2.1.3. Coupling Load to Motor."

◊ Installation of the Driver Unit. (Refer to "3.2.2. Installation of Driver Unit."

◊ Connection of the Motor and the Driver Unit. (Use the cable set provided with the Driver Unit.) Refer to "3.3.1.Connection of Cable Set."

◊ Connection of the Handy Terminal.

◊ Connection to AC power source. Refer to "3.3.2. Connecting Power."

◊ Wiring Servo ON (SVON) and Emergency stop (EMST) signal circuits. (Connector CN2) Refer to "3.3.4. Connector Wiring."

Fig 5-2: Wiring example of automatic tuning setup (reference only)

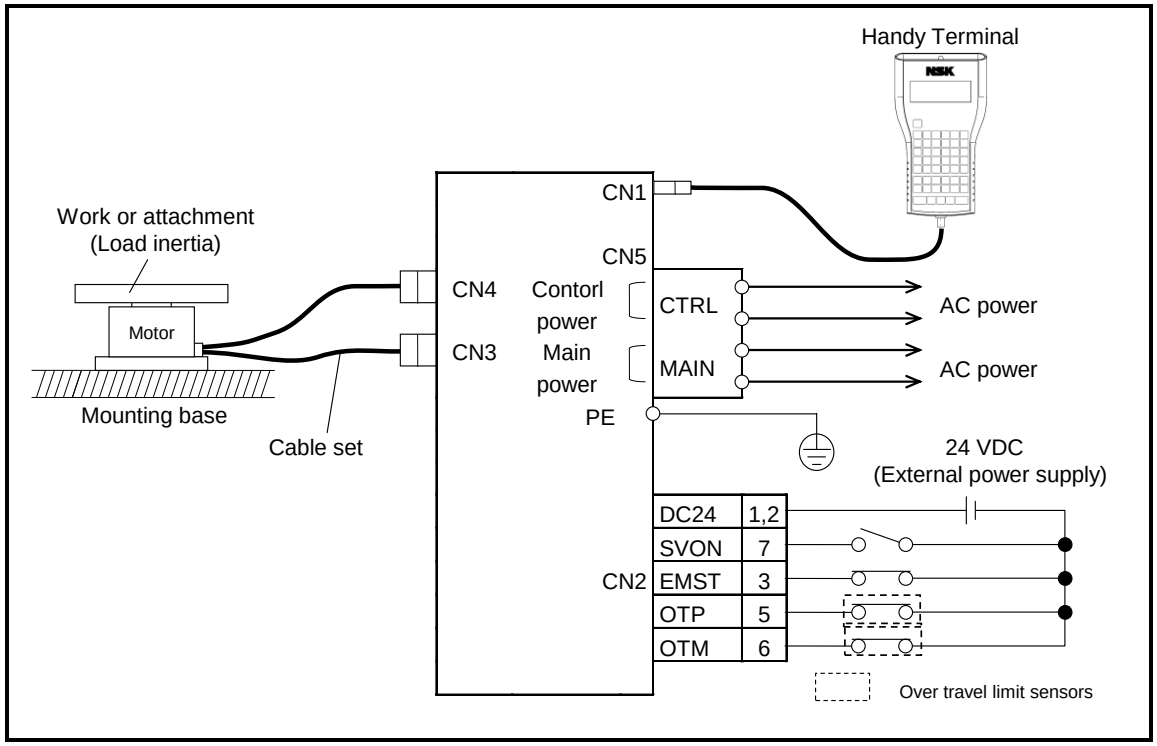

5.2.1. Precautions for Automatic Tuning

⚠ *Danger : Before performing the automatic tuning, be sure to wire the following input signals so that the Motor can stop immediately in case of emergency.*

⚠ *Danger : The Motor will rotate for ± 20° during the automatic tuning in order to estimate the Load moment of inertia. Do not enter the range of Motor rotations.*

⚠ *Caution : The Motor may vibrate at the end of automatic tuning if rigidity of the load is insufficient. In such a case turn the Motor servo off by the following way. Then increase the rigidity or perform manual tuning to continue the tuning.*

- Make the input EMST (Emergency stop) OFF
- Make the input SVON (Servo on) OFF.
- Turn off the power of Driver Unit.

5.2.2. Initialization of Servo Parameters

- The parameters have been initialized at the shipping of the Megatorque Motor System. The initialization is not required for the first operation of the System.

1) Turn off the Servo ON signal (SVON, the connector CN2).

2) Execute the command TS (Tell settings) to read out the servo parameter. Then input the command TS1.

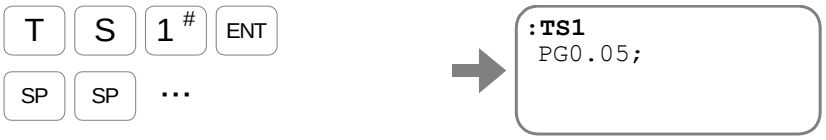

Firstly the parameter PG (Position gain) is read out. Then each input of SP key scrolls to following parameters that belong to the group TS1. Record the parameter values for future reference.

3) Then execute the command TS2 in the same way as above and record the readouts.

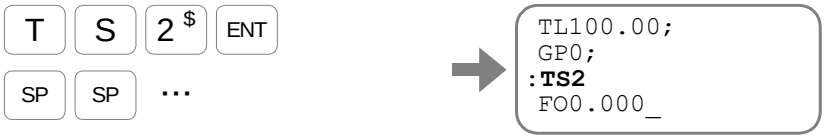

4) Input the password. The screen displays an acknowledgement.

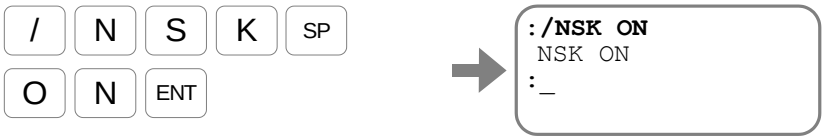

5) Input the command SI (Set initial parameters) to initialize the parameters. The initialization will start.

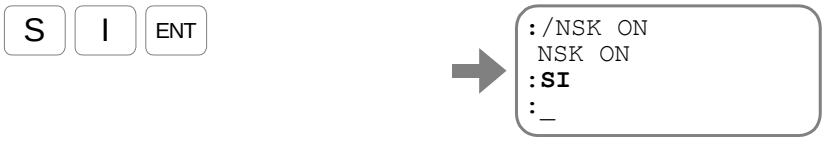

The prompt ": (colon)" will appear when the initialization completes.

Table 5-1: Servo parameter list

Readout by TS1			Readout by TS2		
Parameter	Initial setting	Current setting	Parameter	Initial setting	Current setting
PG*1	0.001		FO	0.000	
PGL	0.001		FP*	0	
VG*1	1.50		FS*	0	
VGL	1.50		NP*	0	
FQ	10		NPQ	0.25	
LG	50.00		NS	0	
LB	0.00		NSQ	0.25	
TL	100.00		DBP	0	
GP	0		BL	100.00	
GT	0.0		FF	100.00	
			ZF	1	

*1:Adjustment of these parameters are necessary for tuning level 1 and 2.

5.2.3. Automatic Tuning

- The automatic tuning estimates the load moment of inertia attached to the Motor, then automatically sets the following servo parameters following the result.

Table 5-2: Servo parameters to be set automatically

Parameter	Description
LO	Load inertia
SG	Servo gain
PG	Position gain
VG	Velocity gain
FP	Primary low-pass filter frequency
FS	Secondary low-pass filter frequency

⚠ *Danger : • Take appropriate precautions for a full turn of the Motor.*

- *When the Motor cannot make a full turn because of construction of the attachment or the load, keep the room so that the Motor can make ±20°rotation. Be sure to set the over travel limit switch (OTP and OTM) for the off-limits area.*

1) Confirm that the LED on the front panel of Driver Unit indicates the System is in the normal state ([Normally]).

2) Input the command AT (Automatic tuning)

A T ENT

```
:
:AT
 AT Ready OK
?_
```

◊ If the message “COND MISMATCH?” appears on the screen, check if the input STP (Stop), a warning or an alarm is on, then input the command AT again.

3) Input OK for the confirmation. The Motor servo automatically activates, and the Motor rotates for 10 to 20° to estimate of load inertia starts.

O K ENT

```
:AT
 AT Ready OK
?OK
 TO ABORT,PUSH [BS]
```

⚠ *Caution : If the BS key is inputted in the middle of estimating load inertia, the estimation will be interrupted, thus making unable to renew the servo parameters.*

4) The screen displays the estimated load inertia LO as shown below when the estimate completes successfully. (The value of LO depends on the condition of load inertia.)

```
 AT Ready OK
?OK
 TO ABORT,PUSH [BS]
 LO*****;
```

Estimated load ineratia

5) After the LO value has appeared on the screen, press the SP key to read out the servo parameters that are set by the automatic tuning.
The BS key aborts the readout and the prompt ": (colon)" appears for the next command.

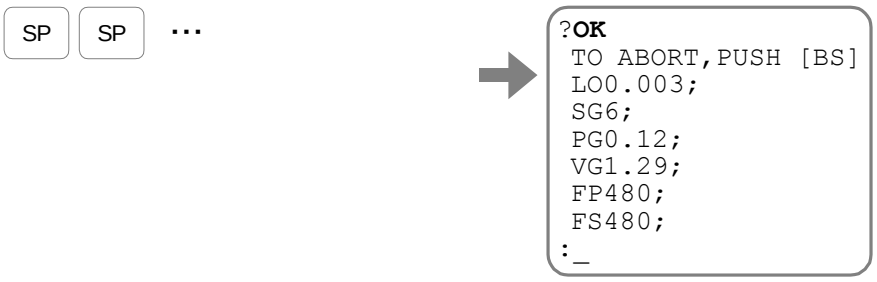

- For the EDD MEGATERM terminal screen display, the parameters set by automatic tuning are displayed in batch.

⚠ *Caution : Take an appropriate action referring to "11. Alarm and Warning" when the error message shown in the table below appears on the screen in the middle of the automatic tuning.*
The LED on the front panel of Driver Unit indicates F8 for the error in the automatic tuning.

Table 5-3: Error message list for automatic tuning

Message on the screen	Description
POSITION OVER?	The Motor rotated beyond ± 28.8° in the middle of automatic tuning.
OVER INERTIA WRN.?	The load moment of inertia is too high. Refer to "3.2.1.4. Confirmation of Use Conditions" for the recommended load inertia.
CAN'T TUNE?	Cannot execute tuning.
ALARM DETECTED?	An alarm has occurred.
CANCELED?	The tuning is cancelled.

5.2.4. Trial Running

⚠ *Danger : Take an appropriate precaution for a full turn of the Motor.*

- Use a demonstration program of the Driver Unit Model EDD to check the result of automatic tuning.

1) Be sure that the inputs of the EMST (Emergency stop), the inputs OTP/OTM (Hardware over travel limit) of the CN2 connector (control Input/Output) are not active.

2) Activate the input SVON (Servo on), input the command SV to put the Motor into the servo on state.

S V ENT

```
:
:
:SV
:_
```

3) Confirm that the LED on the front panel of Driver Unit indicates the System is in the normal state.

4) Lower the Motor velocity MV to 0.1 [s^{-1}] for a trial running.

M V 0 ? . = 1 # ENT

```
:
:
:MV0.1
:_
```

5) Display the menu of the demonstration program on the screen.

S P / A J ENT

```
:
:
:SP/AJ
0>ID9000;_
```

The program for trial running appears on the screen.

6) Input the SP key to scroll the program to the end.

SP SP ···

```
2>ID-9000;
3>TI500.0;
4>JP256;
?_
```

The following program appears on the screen.
(Refer to "6.3.2.3. Programming" for changing the demonstration program.)

ID9000	: Rotate 90° in CW direction. (Rotates in CCW direction when the parameter DI is set tot DI1.)
TI500.0	: Dwell timer is set to 500 msec.
ID-9000	: Rotate 90° in CCW direction. (Rotates in CW direction when the parameter DI is set tot DI1.)
TI500	: 0500 msec dwell timer
JP256	: Jump to the channel 256 (the channel that is specified by the SP/JP.)

7) A prompt "?" appears on the screen when the readout of the demonstration program completes. An input of the ENT key at this stage will make the screen to indicate that the demonstration program is ready.

ENT

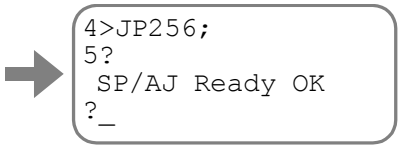

8) Input "OK" if you use the demonstration program as displayed.

◊ Press the ENT key after the prompt "?" to get out from the demonstration program without moving the Motor. The screen displays as "CANCELED?"and the System gets in the normal waiting state for command entry.

O K ENT

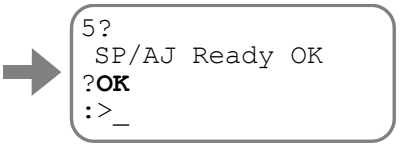

The Motor starts a cyclic motion as soon as you input the OK message. (Firstly, the Motor moves in CW direction.)

9) Stop the Motor with the Command MS after confirmation of tuning results.

M S ENT

- Complete the tuning at this stage if the Motor operates normally.
- If motion of the Motor is unstable, execute the next level of tuning referring to "5.3.2 Minor Tuning of Servo Gains," or "5.4 Tuning Level 3: Manual Tuning" and "5.5 Setting Filters (Tuning Level 2)
- When the tuning is completed change the setting of the parameter MV that matches to actual use conditions.

5.3. Tuning Level 2: Servo Gain Tuning

5.3.1. Input of Load moment of Inertia

- An accurate estimate of load inertia contributes to decrease in external disturbance such as friction, and to increase in the command follow-up capability.

- Input the load moment of inertia with the parameter LO in units of "kg•m^2".

⚠ *Caution : When the estimated of load inertia by the automatic tuning (Tuning Level 1) is not appropriate, be sure to input the load moment of inertia manually.*

  - When the calculation of load inertia is difficult due to the complicated construction of the load, tune the servo parameters referring to "5.3.1.1 When the Load moment of inertia is Unknown."

- The following show an example when the load moment of inertia is 0.123 [kg•m^2].

1) Input the password. The acknowledgement appears on the screen.

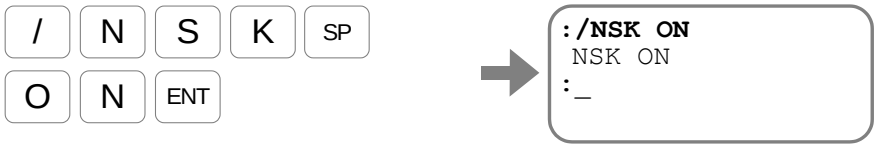

2) Input the value of load inertia.

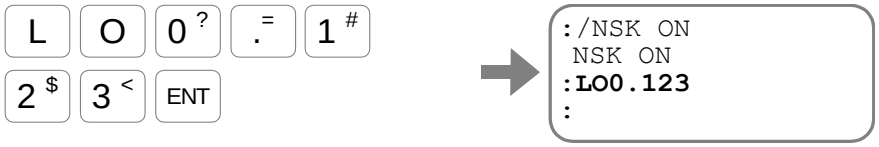

5.3.1.1. When the Load moment of inertia is Unknown

- When an estimation of load inertia is difficult, temporally set a value referring to the criterion of load inertia in "Table 5-4: Criterion of load inertia" below.

Table 5-4: Criterion of load inertia

Motor	Setting of load inertia (LO) [kg•m^2]		
	Low inertia	Medium inertia	High inertia
PS1004	0.010	0.020	0.050
PS1006	0.020	0.050	0.100
PS1012	0.040	0.100	0.200
PS1018	0.060	0.150	0.300
PS3015	0.040	0.120	0.250
PS3030	0.100	0.250	0.500
PS3060	0.200	0.500	1.000
PS3090	0.300	0.750	1.500
PN2012	0.040	0.100	0.200
PN3045	0.150	0.380	0.750
PN4135	0.400	1.100	2.250
PN4180	0.600	1.500	3.000
PX3050	0.003	0.070	0.140

5.3.2. Minor Tuning of Servo Gains

⚠ *Danger : Take an appropriate precaution for a full turn of the Motor.*

- Minor tuning of servo loop gains is required in the following cases.
  - ◊ When an automatic tuning (Tuning Level 1) is not successful.
  - ◊ The parameter LO (Load inertia) is manually inputted.
- Use the parameter SG (Servo gain) for minor tuning of servo loop gains.
  - ◊ A higher SG setting improves the response to positioning command. However, the Motor tends to vibrate when the SG setting is too high.
- The minor tuning of servo loop gains automatically sets the following parameters that are related to the servomechanism. Parameters are listed in the Table 5-5: Servo parameters set by the minor tuning of servo loop gains.

Table 5-5: Servo parameters set by the minor tuning of servo loop gains.

Parameter	Description
PG	Position gain (position loop proportional gain)
VG	Velocity gain (velocity loop proportional gain)

- When the automatic tuning is successfully completed, the parameter SG has been set automatically for the estimated load inertia. Leave the setting as is and start the minor tuning of the parameter SG.
- If the automatic tuning has not been performed or the automatic tuning has not been successful because of an error, perform the following procedures before the minor tuning.

⚠ *Caution : When the parameter LO is manually set as described in "5.3.1 Input of Load moment of Inertia", the parameters SG and FP (Primary low- pass filter) are not set automatically. Set temporally the parameter SG to "SG5" and the parameter FP to "FP200", then start the minor tuning.*

1) Set the servo gain.

Press the SP key several times till the prompt ": (colon) " appears on the bottom line.

2) Set the low-pass filter to 200 Hz.

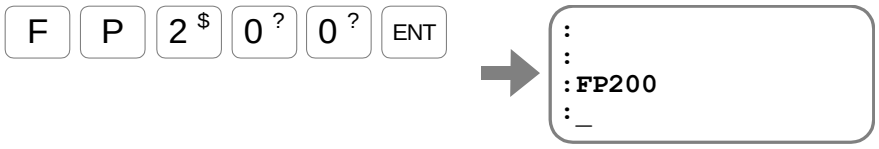

- When tuning the parameter SG, operate the Motor with the demonstration program (SP/AJ). (Follow the procedures 1) to 8) in "5.2.4 Trial Running."
- Start the tuning of the parameter SG.

1) Input **Parameter code** + **/AJ**.

The screen changes as shown below, and you can change the setting of SG by the keys of + and −. (The example below is for setting SG5. Setting depends on the tuning result when the automatic tuning has been completed.)

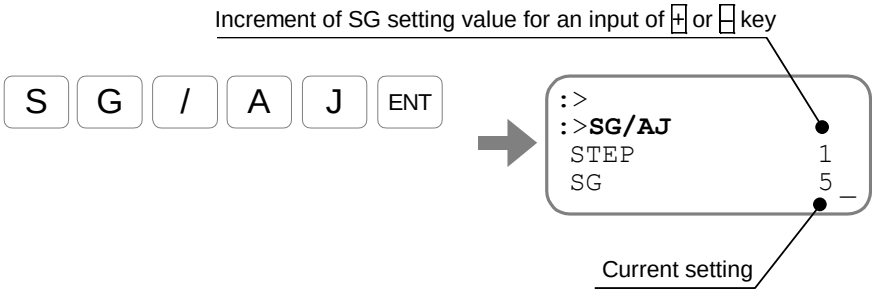

⚠ *Caution: Do not press the keys [SHIFT + .=] or [.= key] because it alters the increment or the decrement for an input of the + and - keys.*

• This is to prevent abrupt change of SG value.

2) Input the + key several times observing the motion of the Motor.

Observe how the responsiveness of the Motor improves as the SG setting increases.

3) Keep pressing the + key further until the Motor starts vibrating slightly and stops its reciprocating motion.

4) Decrease the SG setting pressing the − key several times until the Motor stops vibrating and starts reciprocating motion again.

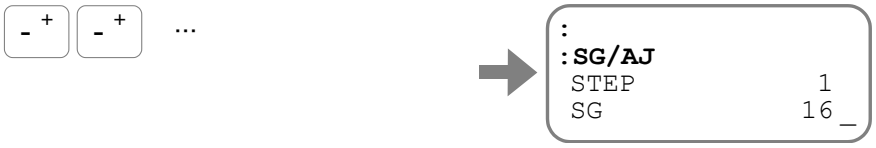

5) The Motor will operate smoothly at any position when the SG is decreased to 80% of the reading at where the vibration stopped.

$16 \times 0.8 \approx 13$

Set this value to the parameter SG.

6) Enter the ENT key to complete the tuning and the changed parameter data will be displayed.
(An input of the BS key reset to the setting before the tuning.)

ENT

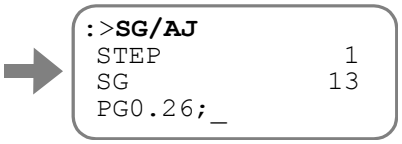

Each setting is indicated with the prompt "; (colon)", and the screen pauses the indication at this stage.

7) Input the SP key.
(An input of the BS key will abort the readout.)

SP SP

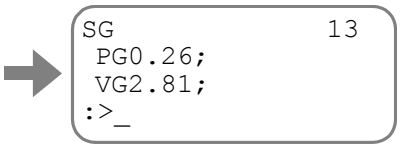

5.4. Tuning Level 3: Manual Tuning

⚠ *Danger : Take an appropriate precaution for a full turn of the Motor.*

- Execute the manual tuning when the "5.3.2 Minor Tuning of Servo Gains" is not successful.
- The manual adjustment is the one fine-tuning it by adjusting VG (Velocity loop proportional gain) when a satisfactory adjustment is not obtained by "5.3.2 Minor Tuning of Servo Gains".

5.4.1. Precautions for Manual Tuning

1) Initialize the servo parameters referring to "5.2.2 Initialization of Servo Parameters."

2) Set the load moment of inertia before the manual tuning referring to "5.3.1 Input of Load moment of Inertia."

3) Use the demonstration program SP/AJ to operate the Motor.
Follow the procedures 1) to 8) in "5.2.4 Trial Running."

5.4.2. Setting Velocity Loop Proportional Gain (VG)

- Perform a minor tuning of the parameter VG (Velocity loop proportional gain).

1) Input **Parameter code** + **/AJ**.
The screen changes as shown below, then the parameter VG value can be changed by the keys [+] and [−].

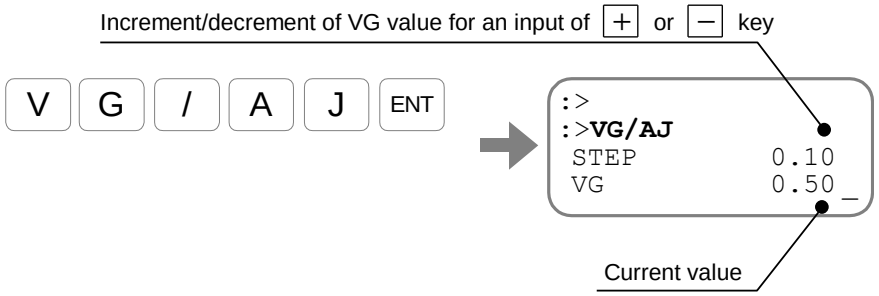

⚠ *Caution : An input of the keys [SHIFT] + [.=] will alter the increment or the decrement of an input of the (+) and (–) keys to 10 times of the current setting.*

- Be careful with the motor vibration because this will make sudden change of the VG value.

An input of the [.=] key will alter the increment or the decrement of an input of the (+) and (–) keys to 1/10 of the current setting.

2) Input the [+] key several times observing the motion of the Motor.

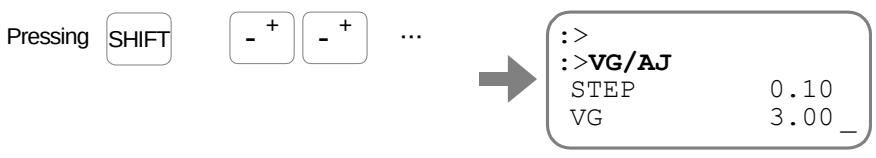

Observe how the responsiveness of the Motor improves as the setting of VG gets higher.

3) Keep pressing the [+] key until the Motor starts vibrating slightly and stops reciprocating motion.

Pressing [SHIFT] [- +] [- +] ...

4) Decrease the VG pressing the [—] key several times until the vibration stops and the Motor starts reciprocating motion again.

[- +] [- +] ...

5) Obtain the VG value that is 80% of VG at where the vibration stopped.
If the vibration stopped at VG4, 3.2 (4 × 0.8 = 3.2) shall be the value of the VG.
Set it to the parameter VG.

6) Decrease the VG setting to 3.2 by pressing the [—] key.

[- +] [- +] ...

7) Input the [ENT] key to complete a setting of the parameter VG. The prompt ": (colon)" appears for the confirmation.

[ENT]

(An input of the [BS] key returns to the setting before tuning.)

- The changing parameter VG will clear the parameter SG (Servo gain) to SG0.
  - ◊ Setting of the parameter SG automatically sets the parameter PG (Position loop proportional gain) and the parameter VG as described in the chapter "5.3.2 Minor Tuning of Servo Gains." As the parameter VG has been individually set in this section, not derived from a setting of the parameter SG, the parameter SG is cleared to SG0.

5.5. Setting Filters (Tuning Level 2)

- Setting the Low-pass filters (parameters FP and FS) will decrease resonant noise level. The parameters FP and FS describe the cut-off frequency of low-pass filters in [Hz].
  - ◊ Firstly, set the parameter FP to FP200 if the System vibrates and/or generates resonant noise after the servo loop gains were properly set.
  - ◊ If the parameters FP and FS are set too low, the servomechanism may become unstable, thus resulting in the Motor hunting or adverse effect on positioning.
- Operate the Motor by the demonstration program (SP/AJ) for setting the low-pass filters. Follow the procedures 1) to 8) described in "5.2.4 Trial Running."

5.5.1. Setting Low-pass Filter

- Firstly start minor adjustment of the parameter FP (Primary low-pass filter).

1) Input as **Parameter code** + **/AJ**.
The screen changes as shown below, and you can change the FP value by the input of the keys [+] and [−].

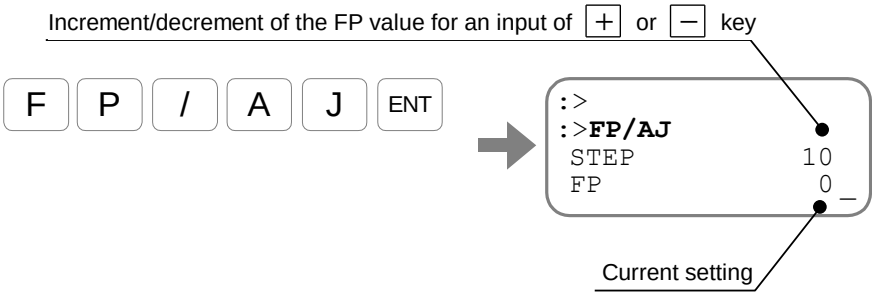

⚠ *Caution : • An input of the keys SHIFT + .= will alter the increment or the decrement of an input of the (+) and (–) keys to 10 times of the current setting.*

- Be careful with the motor vibration because this will make sudden change of the FP value.

An input of the .= key will alter the increment or the decrement of an input of the (+) and (–) keys to 1/10 of the current setting.

2) Input the [+] key. The cut-off frequency will be temporally set to 1 kHz.

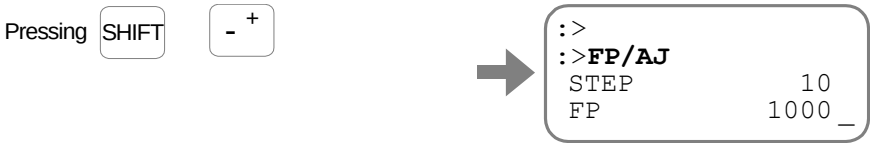

3) Press the [−] key several times to lower the low-pass filter frequency (FP data) until the resonant noise vanishes.

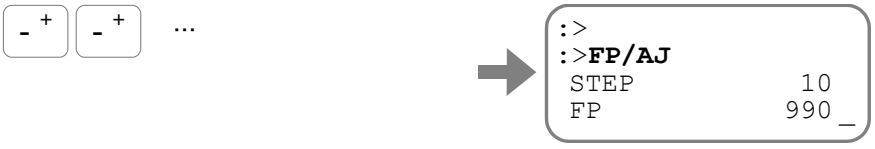

4) If the motion of the Motor becomes unstable, press the [+] key several times to increase the low-pass filter frequency until it becomes stable

Pressing [SHIFT] [-+] [-+] ...

```
:>
:>FP/AJ
 STEP              10
 FP               120_
```

5) Press the ENT key to complete the setting.
(An input of BS key resets to the original setting.)

[ENT]

```
:>FP/AJ
 STEP              10
 FP               120
:>_
```

- [Reference] When terminates the low-pass filter

[F] [P] [0 ?] [ENT]

```
:
:
:FP0
:_
```

5.5.2. Setting Notch Filter

- When setting the notch filters (NP and NS), you need to measure the resonant frequency by checking the velocity waveform with the monitoring pins on the front panel of the Driver Unit by means of an oscilloscope, etc. or the EDD MEGATERM.

- Check the resonant frequency as shown in "Fig 5-3: Measuring resonance frequency". If the frequency is 200 Hz, type as shown below to set the filter frequency.

[N] [P] [2 $] [0 ?] [0 ?] [ENT]

```
:
:
:NP200
:_
```

Fig 5-3: Measuring resonance frequency

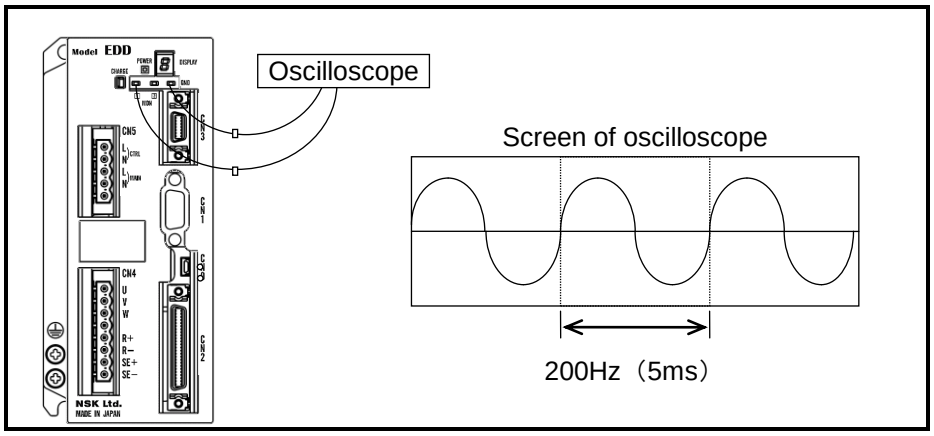

6. Operation

6.1. Preparation

6.1.1. Wiring Check

⚠ *Caution : On completion of wiring the Driver Unit Model EDD, check the items listed in Table 6-1: Before operating the Megatorque Motor System.*

Table 6-1: Before operating the Megatorque Motor System

No.	Items to be checked	Points to be checked
1	Connection of main power and Input/Output signal cables	• Check if the wiring is properly done. • Check if the screws of the ground terminals are securely fastened. • Check if the connectors are properly connected and secured.
2	Connecting cables	• Check if the Cable Set (Motor cable and resolver cable) are properly connected and locked to the connectors.
3	Handy Terminal	• Check if the Handy Terminal is connected properly, and locked to the CN2 connector.

6.1.2. Operation Procedure

Fig 6-1: Operation Procedure

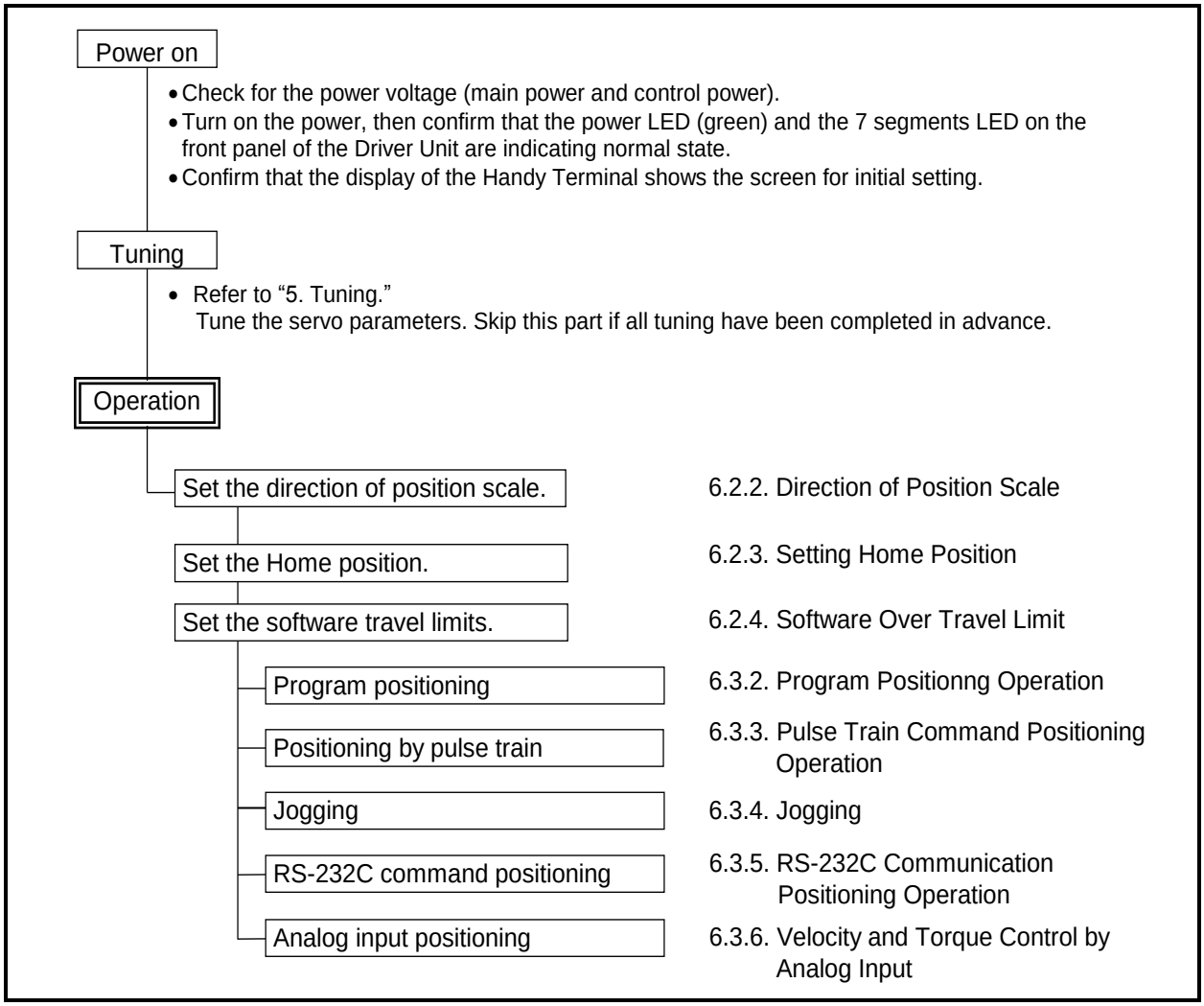

6.2. Position Scale

6.2.1. Resolution of position Scale

- A Motor has eighty teeth on its circumference, and the position sensor divides 1-tooth into 32 768 by digital signal processing. Therefore, the pulse count for one revolution of the Motor shall be obtained as below.

  32 768 × 80 = 2 621 440 [count/revolution]

- The parameters and the commands of the Megatorque Motor System depend on the unit (count) of the resolution.

  ◊ However, the software over travel limit cannot be set in units of degree.

Table 6-2: Resolution of position scale

Resolution of position scale	
Unit of count [count/revolution]	Unit of degree [0.01°/revolution]
2 621 440	36 000

Fig 6-2: Position scale system

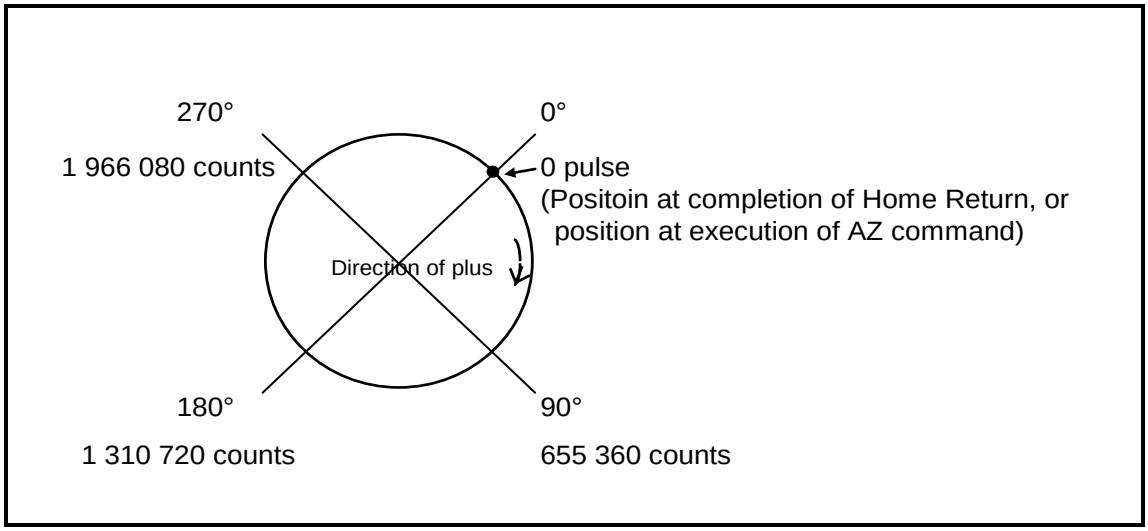

6.2.2. Direction of Position Scale

- You can reverse the sign of the position scale not to observe unpredicted operations when the Motor mounting direction is reversed.
  - ◊ CW and CCW are the direction when you look the Motor from the Motor output axis (rotor).
  - ◊ The parameter DI (Direction inversion) specifies counting direction of the position scale.
  - ◊ The relation between the DI data and the counting direction is shown in the "Table 6-3: Parameter DI and counting direction"

Table 6-3: Parameter DI and counting direction

DI data	Setting	CW	CCW	Shipping set
0	Standard	Counting in plus	Counting in minus	✓
1	Reversed	Counting in minus	Counting in plus	

- When the direction of position scale reading is reversed, the position scale of the following functions is reversed as well.
  - ◊ All directions of positioning operation
  - ◊ Directions of software travel limits

⚠ *Caution : This manual expresses the plus direction for the count-up direction, the minus direction for the count-down direction, and the rotational direction, not by the CW or CCW direction which is seen from the Motor output axis side. The plus and minus directions depend on the setting of the parameter DI. So always be careful for the setting of the DI.*

⚠ *Caution : The plus and minus directions of hardware over travel limit and the phase of position feedback signal output do not reverse even the position scale direction is reversed.*

- Input OTP: prevents the CW rotation of the Motor seen from the Motor output axis.
- Input OTM: prevents the CCW rotation of the Motor seen from the Motor output axis.

◆ When counting the CCW direction as plus

- Input the parameter DI to reverse the position scale.
  (The password is required.)

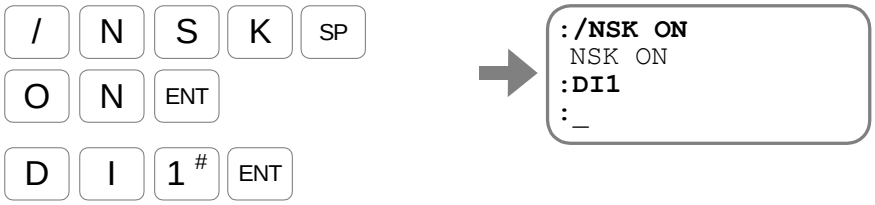

6.2.3. Setting Home Position

- The Motors have their own home position when they are shipped.
- The user absolute home position, which is the origin of operation, is set to the same position of the Motor home position when the Motor is shipped. The user absolute home position can be reset by the command AZ (Absolute Zero position set) or a Home Return operation.
  - ◊ The user absolute home position functions as the origin for positioning operations caused by internal commands, such as positioning commands, jogging, and the software over travel limit. It is also the origin of the divided circular resolution (Parameter CR) of a pulse train positioning command and the feedback signal.
- When the user absolute home position is defined once, no Home Return operation is required for every power-on because the Megatorque Motor System with Driver Unit Model EDD incorporates an absolute position sensor.
- As shown in "Fig 6-3: User home position and the parameter AO" below, the user absolute home position and the Motor absolute home position are set on the same position when the Motor is shipped.
  - ◊ When the user home position is changed by the command AZ or a Home Return operation, the distance in the CW direction from the Motor absolute home position to the new user absolute home position is set to the data of the parameter AO (Absolute position scale offset).

Fig 6-3: User home position and the parameter AO

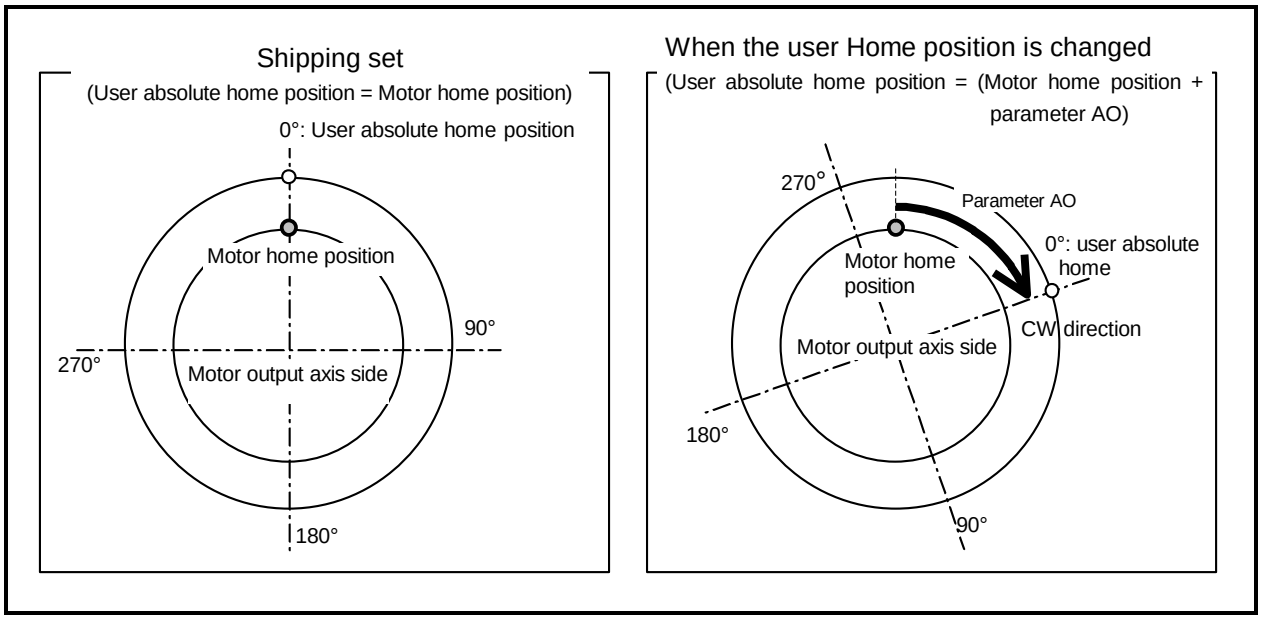

- Change the scale of home position by the command AZ (Absolute Zero position set).

1) Move the Motor to the position to be the user absolute home position.

* The setting can be done with the servo on state.

2) Confirm the current position by the monitor TD (Tell position, degree unit) in units of 0.01° [angle degree].

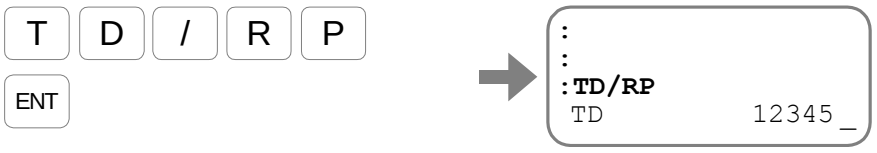

Press the [BS] key to abort monitoring.

3) An input of the command AZ sets the current commanded position (current position + position error) to the user absolute Home position.
(The command AZ requires an input of the password.)

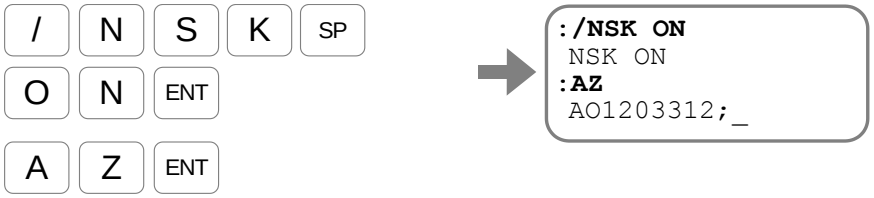

Execution of the command AZ changes the setting of the parameter AO. (The parameter AO is the offset between the Motor absolute position data and the user absolute home position.)
Input the [SP] key to show the prompt ": (colon)" on the screen.

4) Confirm the scale reading of the home position again.

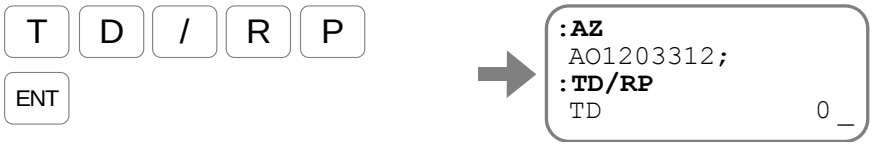

Input the [BS] key to abort monitoring.

6.2.4. Software Over Travel Limit

- This function is to set an off-limits area on the Motor rotation range.

⚠ *Caution : F2 alarm is produced when the over travel is occurred.*
The software over travel is detected based on the positioning command, rather than the current Motor position. Positioning command is equal to the sum of current position and position error.
Therefore, if the positioning command is not within the range of software over travel detection, the F2 alarm is not produced even the actual motor position is entered within the detection range due to the overshooting.

⚠ *Caution : When the off-limits area should be controlled by the current position, it is essential to set the hardware over travel limits.*

⚠ *Caution : When the software over travel limit is specified and when performing a short cut positioning with the commands AD, AR, AQ (Absolute positioning) under this state, the Motor turns into an opposite direction not to enter the off-limits are regardless the positioning distance.*

- Refer to "8.6.3. Shorter Way Positioning" for to prevent going in the off-limits area.

- Parameters OTP and OTM (Software travel limit) set the off-limits area. As shown in "Fig 6-4: Software off-limits area" below, the parameters specify the off-limits area into counting up direction of position scale from the point of the parameter OTP to the point of the parameter OTM.
- The off-limits area becomes effective if the difference between the parameter OTP and OTM is one pulse or more.

Fig 6-4: Software off-limits area

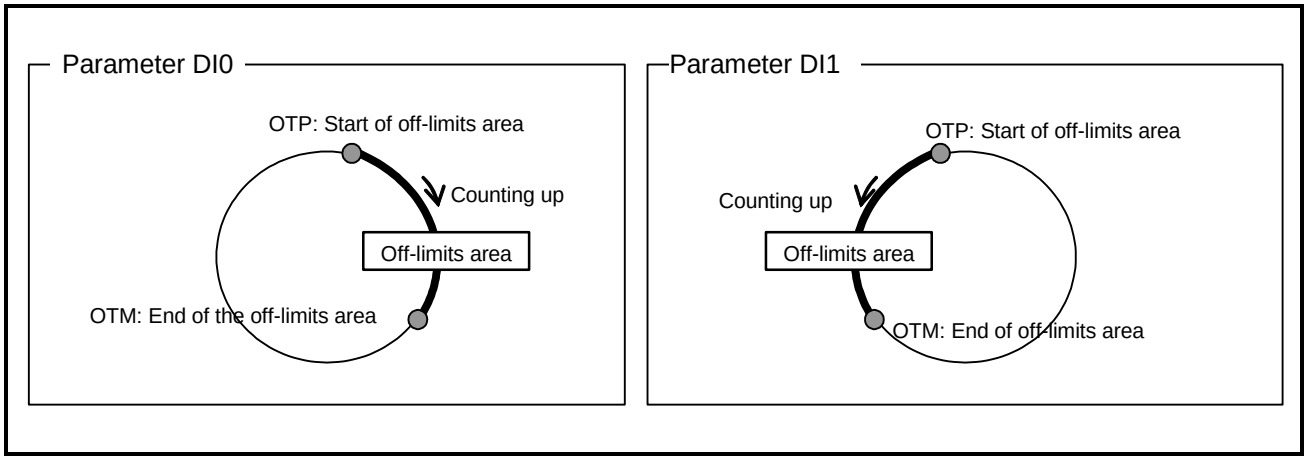

- If the Motor goes in the off-limits area, the System gets in the state of software over-travel.
  The Motor stops immediately when it is moving in the direction towards the off-limits area.
  In this state, the Motor only accepts the position command going out the off-limits area.
- When the System goes in a state of software over travel, the outputs of OTPA and OTMA (Over travel limit) will be closed.

Table 6-4: State of software over travel

7 segments LED	Command TA (Tell alarm)	Description	Motor state
F2	**F2>Software Over Travel**	Software over travel	Servo lock

- If the current position is within the off-limits area at the power up, or servo-off state, the over travel limit is stated to the nearest over travel limit.
  If the current position is at the middle of travel limits between OTP and OTM, at the power up, or servo-off state, the system assume the motor is entered from OTP side.

6.2.4.1. Setting the Limits by Teaching

- Follow the procedures below after the Home position is set.

1) Turn off the main power supply to the Driver Unit.

2) Inhibit turning on the Motor servo.

M O ENT

```
:MO
:_
```

3) Turn the Motor manually to the position of plus side software travel limit.

4) Set the current position as the plus side software over travel limit.
(Inputting the parameter OTP requires the password.)
Input **Parameter code** + **/ST**.

/ N S K SP
O N ENT
O T P / S T
ENT

```
:/NSK ON
 NSK ON
:OTP/ST
 OTP123456;_
```

The parameter OTP is set by teaching. Input the SP key to put the prompt ": (colon)" on the bottom line.

5) Move the Motor to the position of minus side software over travel limit.

6) Set the current position as the minus side software over travel limit.
(Inputting the parameter OTM requires the password.)
Input **Parameter code** + **/ST**.

/ N S K SP
O N ENT
O T M / S T
ENT

```
:/NSK ON
 NSK ON
:OTM/ST
 OTM456789;_
```

The parameter OTP is set by teaching. Input the SP key to put the prompt ": (colon)" on the bottom line.

7) Move the Motor into the software off-limits area, then confirm that the alarm F2 (Software over travel) goes active. (Identify the alarm by the seven segments LED or the command TA (Read alarm).

8) Input the command SV (Servo on) to activate the Motor servo.

S V ENT

```
:OTM/ST
 OTM456789;
:SV
:_
```

6.2.4.2. Setting the Limits by Direct Input

- If the position data to be the software over travel limits are previously known, the position data can be directly set to the parameters OTP and OTM (Software over travel).
  (The password is required in order to set the parameters OTP and OTM.)

  1) Set the plus side over travel limit.

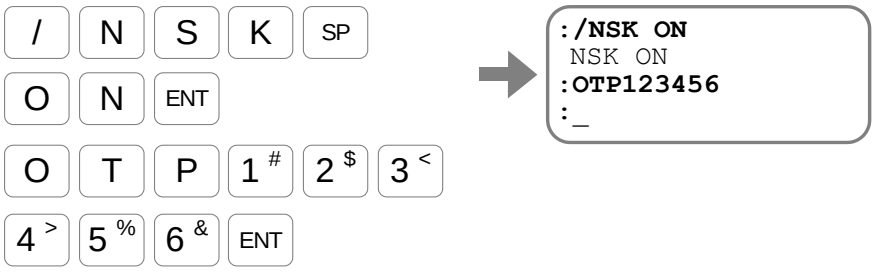

  2) Set the minus side over travel limit.

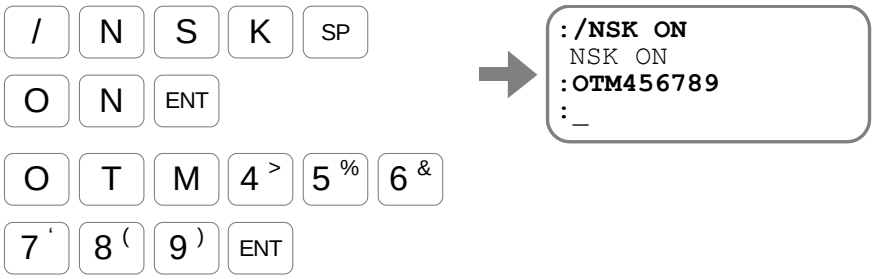

6.3. Positioning Operation

6.3.1. Positioning Command

- The Driver Unit Model EDD incorporates the positioning commands. There are two ways for execution of the positioning commands.
  - ◊ Input directly the command via RS-232C communication.
  - ◊ Preprogram the positioning commands and the operational conditions and store them in the program channels. Specify channel numbers by the PRG0 to PRG7 inputs (Internal channel selection) and input the RUN input (Start program) to execute these programs.

The positioning command and related parameters are shown in the " Table 6-5: Positioning command and parameter." Refer to "9. Details of Command and Parameter" for more details.

Table 6-5: Positioning command and parameter

Category	Name (code)	Function	Initial setting	Data range	Unit
Command	IR	Incremental positioning in units of pulse	–	0 to ± 262 144 000	pulse
	AR	Absolute positioning in units of pulse (Shorter way)	–	0 to 2 621 439	
	AR/PL	Absolute positioning in units of pulse ([+ direction] [Example:AR100000/PL])	–	0 to 2 621 439	
	AR/MI	Absolute positioning in units of pulse ([– direction] [Example:AR100000/MI])	–	0 to 2 621 439	
	ID	Incremental positioning in units of degree	–	0 to ± 3 600 000	0.01°
	AD	Absolute positioning in units of degree (Shorter way)	–	0 to 35 999	
	AD/PL	Absolute positioning in units of degree ([+ direction] [Example:AD9000/PL])	–	0 to 35 999	
	AD/MI	Absolute positioning in units of degree ([– direction] [example: AD9000/MI])	–	0 to 35 999	
	IQ	Incremental positioning with user scale	–	0 to ± QR×100	360°/paramer QR
	AQ	Absolute positioning with user scale (Shorter way)	–	0 to QR-1	
	AQ/PL	Absolute positioning with user scale ([+ direction] [Example: AQ180000/PL])	–	0 to QR-1	
	AQ/MI	Absolute positioning with user scale ([– direction] [Example: AQ180000/MI])	–	0 to QR-1	
Parameter	IN	Sets threshold to output the IPOS signal	400	0 to 2 621 439	pulse
	IS	In-position stability timer	0.0	0.0 to 10 000.0	ms
	MV	Rotational velocity	1.000	0.001 to 10.000	s^{-1}
	MA	Rotational acceleration	1.0	0.1 to 800.0	s^{-2}
	MB	Rotational deceleration	0.0	0.0: Set by MA. 0.1 to 800.0	
	CSA	Acceleration profile	1	0: Set by CSA. (CSB only) 1: Constant acceleration 2: Modified sine 3: Modified trapezoid 4: Cycloid 5: Half sine	
	CSB	Deceleration profile	0		
	★QR	Circular dividing number for an incremental positioning with user scale	360 000	1 to 2 621 440	dividing number/ revolution

★The password is required.

6.3.2. Program Positioning Operation

- The program positioning operation means an execution of some preprogrammed positioning commands and operational conditions in the program channels. The inputs of PRG0 to PRG7 specify a program channel and the input RUN (Start program) starts the positioning operation.
  - ◊ The program operation is available via RS-232C communication.
- The commands and parameters unique to program positioning operations are listed in the " Table 6-6: Inputs/Outputs and parameters related to program positioning.", and the commands and parameters related to positioning operations in the " Table 6-5: Positioning command and parameter "
  Refer to "9. Details of Commands and Parameters" for more details.

Table 6-6: Inputs/Outputs and parameters related to program positioning.

Category	Name (code)	Function	Initial setting	Data range	Unit
Control Input	RUN	Start program	–	Turning ON from OFF starts positioning. .	–
	PRG0 to 7	Internal program channel selection	–	Specifies the program channel by ON and OFF (binary combination)	–
	STP	Stops positioning operation.	–	OFF: Positioning permitted ON: Starts decelerating and inhibits positioning operation.	–
Control Output	BUSY	In-operation	–	Open: Idle Closed: Executing positioning.	–
	IPOS	In-position	–	Open: Positioning unfinished. Lost target position. Closed: Positioning completed. Target position secured.	–
Parameter	FW	IPOS output mode	–1.0	– 0.1 to – 10 000.0: CFIN mode 0.0: IPOS mode 0.1 to 10 000.0: FIN mode	ms – ms
	BW	BUSY signal stability timer	0.0	0.0 to 10 000.0	ms
	MD	Deceleration select	0.0	0.0: Applies the deceleration value specified in the program being executed. 0.1 to 800.0	– s^{-2}
	OE	Sequence code	0	0: Completes a positioning after the completion of channel program that is currently being executed. 1: After completion of channel program that is currently executed, the input RUN executes the program of the channel with the next channel number. (Disregards the input PRG.) 2: Automatically executes the program of the channel with the next channel number after completion of the channel program that is currently executed.	

- Besides the positioning commands, rotational velocity and acceleration, it is possible to program almost all parameters including servo gains and conditions for completing positioning.
  These functions make possible to have optimal tuning that is suited for each positioning operation.
- The contents of program are simple. It consists of the settings of parameter and positioning commands and they will be sequentially executed from the beginning. Example of a program is shown in the " Fig 6-5: Program example".

Fig 6-5: Program example

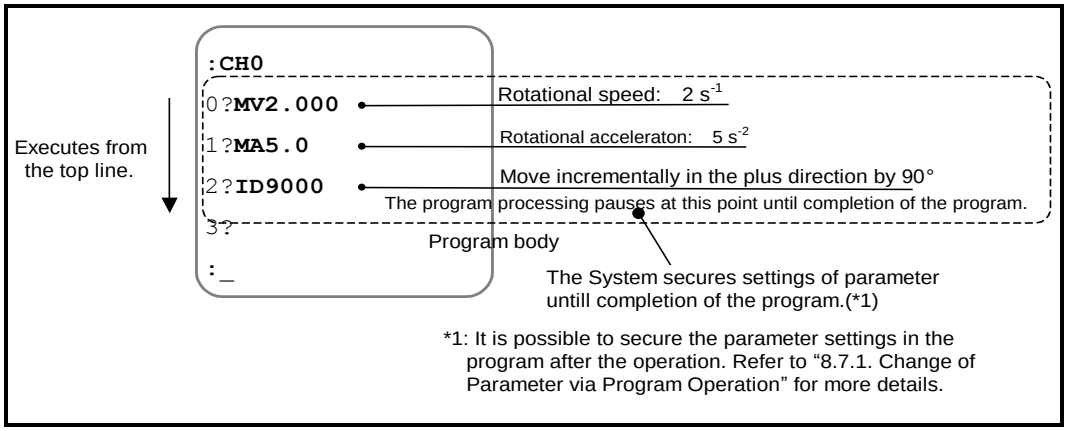

6.3.2.1. Program Operation via Control Inputs and Outputs

- The following figure illustrates a typical procedure example of program operation.

Fig 6-6: Signal timing of program operation via control Inputs/Outputs

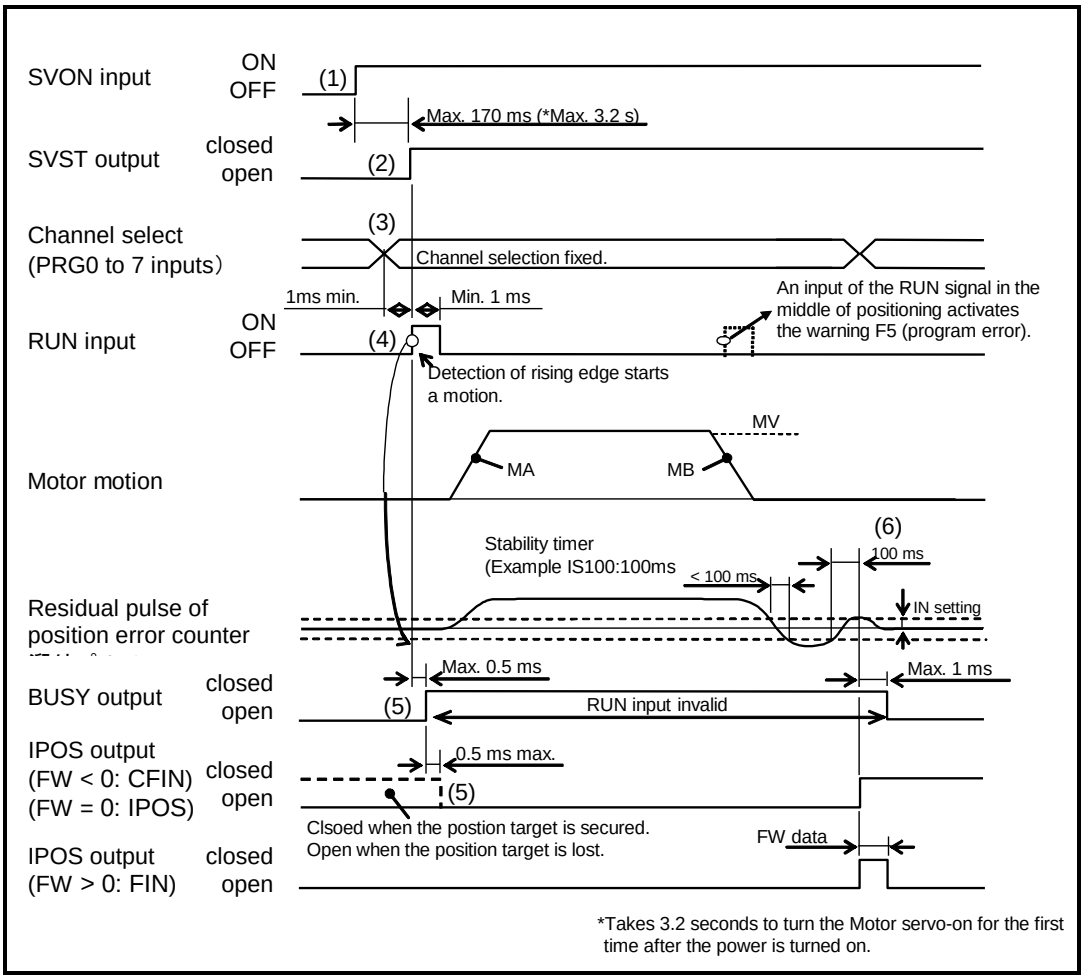

(1) Activate the input SVON (Servo-on) to turn the Motor servo on.

(2) The output SVST (Servo state) closes when the Motor gets in the servo-on state.

(3) Select the program channel with the inputs of PRG0 to 7 (Internal program channel select). Fix the selection 1 [ms] before the input RUN activates.

(4) The System executes a selected channel program when the input RUN turns ON. The positioning operation is controlled by the parameter values of MA (Rotational acceleration), MB (Rotational deceleration) and MV (Rotational velocity).

(5) The output BUSY (In-operation) closes while the System is executing the contents of the channel. At the same time, the output IPOS (In-position) is forcibly opened. If the input RUN is activated while the output BUSY is closing, the warning F5 (Program error) occurs and the Motor decelerates and stops.

(6) A positioning operation completes when the positioning error counter clears parameter values of IN (In-position threshold) and IS (In-position stability timer) at the final stage of positioning.

- If a channel that contains no program is specified, the warning F5 (Program error) occurs. (Refer to "11. Alarm and Warning.")

Setting of internal program channel

- A binary combination of ON and OFF of the inputs PRG0 to 7 selects a channel to be executed.

Table 6-7: Channel selection

Channel number	Combination of PRG0 to 7 inputs (●: ON) (○: OFF)							
	PRG7	PRG6	PRG5	PRG4	PRG3	PRG2	PRG1	PRG0
0	○	○	○	○	○	○	○	○
1	○	○	○	○	○	○	○	●
2	○	○	○	○	○	○	●	○
3	○	○	○	○	○	○	●	●
4	○	○	○	○	○	●	○	○
5	○	○	○	○	○	●	○	●
6	○	○	○	○	○	●	●	○
7	○	○	○	○	○	●	●	●
8	○	○	○	○	●	○	○	○
9	○	○	○	○	●	○	○	●
10	○	○	○	○	●	○	●	○
11	○	○	○	○	●	○	●	●
12	○	○	○	○	●	●	○	○
13	○	○	○	○	●	●	○	●
14	○	○	○	○	●	●	●	○
15	○	○	○	○	●	●	●	●
16	○	○	○	●	○	○	○	○
17	○	○	○	●	○	○	○	●
18	○	○	○	●	○	○	●	○
19	○	○	○	●	○	○	●	●
20	○	○	○	●	○	●	○	○
21	○	○	○	●	○	●	○	●
22	○	○	○	●	○	●	●	○
23	○	○	○	●	○	●	●	●
24	○	○	○	●	●	○	○	○
25	○	○	○	●	●	○	○	●
26	○	○	○	●	●	○	●	○
27	○	○	○	●	●	○	●	●
28	○	○	○	●	●	●	○	○
29	○	○	○	●	●	●	○	●
30	○	○	○	●	●	●	●	○
31	○	○	○	●	●	●	●	●
32	○	○	●	○	○	○	○	○
33	○	○	●	○	○	○	○	●
.	.	.	.	.	.	.	.	.
.	.	.	.	.	.	.	.	.
.	.	.	.	.	.	.	.	.
251	●	●	●	●	●	○	●	●
252	●	●	●	●	●	●	○	○
253	●	●	●	●	●	●	○	●
254	●	●	●	●	●	●	●	○
255	●	●	●	●	●	●	●	●

6.3.2.2. Program Positioning Operation via RS-232C Communication

- The command SP (Program start) starts a program operation.
- Start the program in "Fig 6-7: Program example" below as an example.

Fig 6-7: Program example

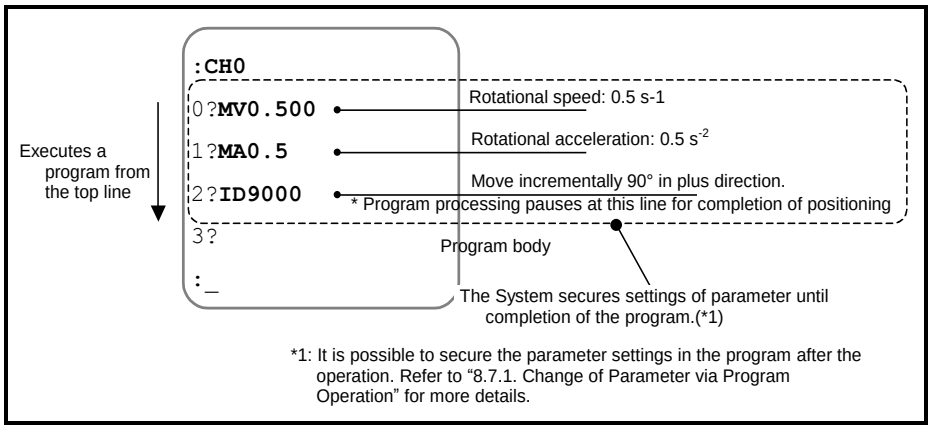

◊ The channel number 0 is used for the program. Input the command SP0.(Fig 6-7: Program example)

The Motor moves 90° in the plus direction. The prompt is changed to ":>" from the colon.

◊ The prompt ":>" indicates that the local parameter is applicable. This means that parameters MV and MA specified in this channel are temporarily effective.

◊ When the program of channel 0 completes after the Motor moved for 90°, the global parameter becomes effective again for the channel program.

Confirm completion of the positioning, then input the ENT key to show the prompt colon again.

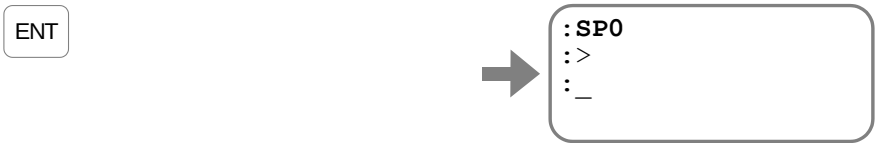

The prompt is changed to a colon.

- The purpose of the prompt is to show which parameter, the global parameter or the local parameter, should be read out on the screen.

◊ If the use of prompts to indicate effectiveness of the global parameter and the local parameter interferes communication control, set the parameter PP (Parameter prompt) to PP0, which cancels the function of the parameter prompt. The prompt is always the colon in this state. (The parameter PP requires the password.)

- When RS-232C is used to set a parameter, you may set either parameter, the global parameter or the local parameter, even when the prompt is ":>".

6.3.2.3. Programming

- Write the program for a program positioning operation via RS-232C communication or the EDD MEGATERM. When programming, do not perform any program operation.
- There are 256 channels available for programming area and you can program multiple parameters and positioning commands in one channel.
- There are 1 024 lines for the program area in each channel.
  - ◊ There are 256 channels available when four commands are programmed in each channel.
  - ◊ There are 128 channels available when eight commands are programmed to each channel.

Fig 6-8: Programming area

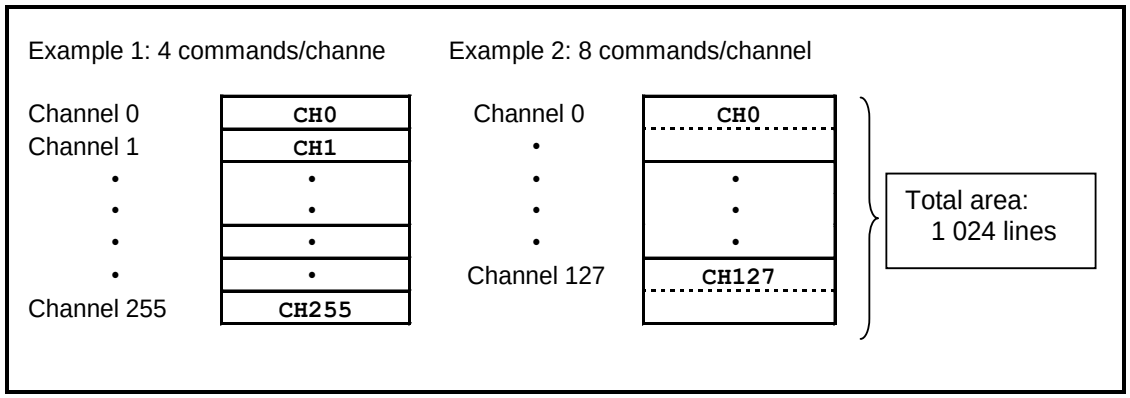

- Program editing commands for each channel are shown in "Table 6-8: Program editing command and exclusive command of channel".

Table 6-8: Program editing command and exclusive command of channel

Category	Name (code)	Function	Data	Unit
Editing command (★ Requires the password.)	CH	Editing channel	0 to 255	channel
	CC	Clears program in a channel.	0 to 255 256: Initialize the demonstration program	channel
	★CC/AL	Clears program of all channel and initializes the demonstration program.	–	–
	CD	Deletes a specified channel, thus the number of the following channels goes up by one.	0 to 255	channel
	CI	Inserts a channel with specified channel number thus deleting the channel with assigned number of 255.	0 to 255	channel
Editing command of channel	LD	Delete a line being editing thus moving up the following lines.	–	–
	LI	Insert a new line on the line being edited.	–	–
Exclusive command of channel	TI	Sets a dwell timer to a channel program.	0.1 to10 000.0	ms
	JP	The program jumps to the top line of a specified channel.	0 to 255	channel
Monitor	TC	Reads out the contents of a specified channel program.	0 to 255	channel
	TC/AL	Reads out the contents of all channel programs.	–	–

★: The password is required.

Editing new program channel

- Example below describes a positioning program to rotate the Motor 90° into the plus direction from the current position with a velocity of 0.5 [s^{-1}].

1) The command CH (Editing channel) starts program editing of the specified channel.

2) Input the parameter and the positioning command following the prompt "line number and ?." When an input to the line is confirmed by an entry of the ENT key, the next line appears for an input.

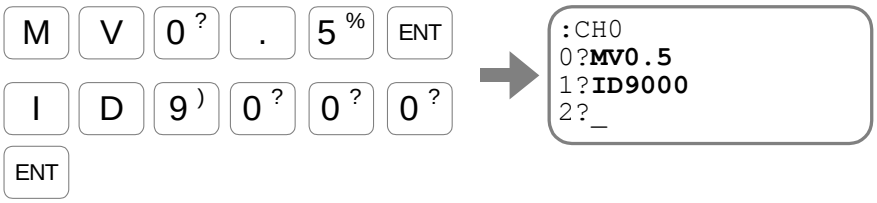

3) For completion of editing, input the ENT key when the prompt "line number and ?" is on the bottom line.

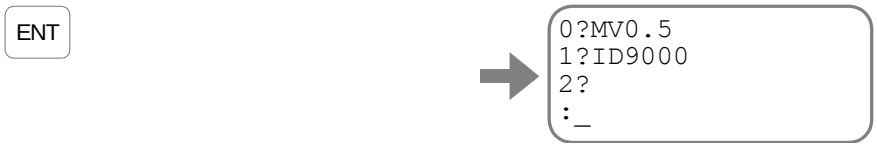

The prompt ": (colon)" is on the bottom, completing the channel editing.

Line editing

- An example shown below describes changing the amount of rotation for present program to 45°.

1) The command CH (Editing channel) starts editing the program. The line with the inputted program appears on the screen. Press the [SP] key to show the line to be edited.

2) Press the [BS] key to enter the editing mode of the line.

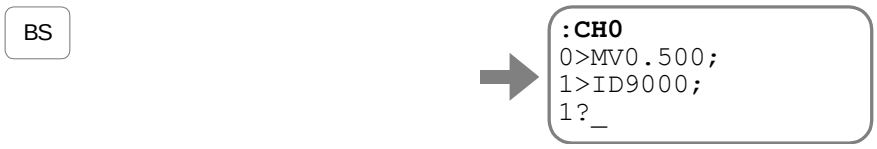

The prompt "line number and ?" appears on the bottom line.

3) Input the new positioning command.

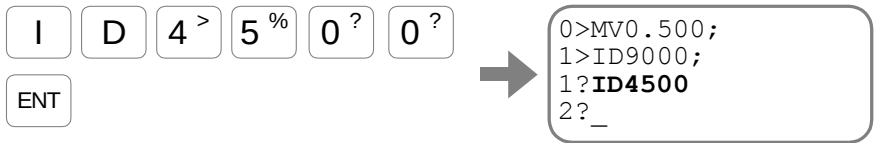

Completion of the input shows the next line with line number of 2.

4) Press the [ENT] key while the prompt "line number and ?" is on the bottom line.

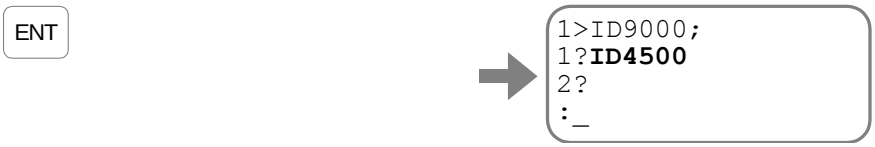

This completes the channel editing and the prompt ": (colon)" appears on the bottom line.

- Please use the channel editing screen when using the EDD MEGATERM.

Insert and deletion of a program line

- The following describe how to insert and delete program line.

1) Start editing a specified program with the command CH (Channel start).
The System reads out already programmed lines on the screen. Press the SP key to scroll the objective line to be inserted or deleted.

2) Input the BS key at the objective line and get in the editing mode of the line.

The prompt "line number and ?" appears on the bottom line.

3) Inserting or deleting the line.

◊ Insert a new line by the command LI (Insert a line).

As the new line is blank, the prompt is only ";", set the editing mode by the BS key to input the new command.

◊ Delete a blank line by the command LD (Delete a line).

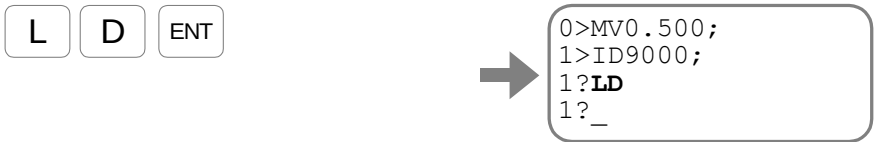

Thus the specified line has been deleted and the next line goes up to the deleted position.

- Please use the channel editing screen when using the EDD MEGATERM.

Reading out of a program line

- When editing a program, you can read out a program line.
  - ◊ Input **?** + **line number** following the prompt "line number +?". The program starting from the specified line is repeated below. Press the SP key to scroll the next line.

- Other way of reading out a program line.
  - ◊ An input of "**?**" following the prompt "line number +?" will repeat the program starting from the current line.
  - ◊ An input of "**?S**" following the prompt "line number +?" will repeat whole program starting the top line.

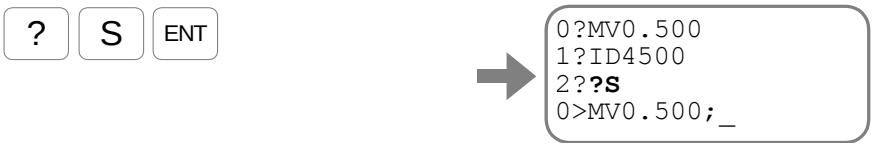

  - ◊ An input of "**?E**" following the prompt "line number +?" jumps to the end line of the program and the System waits for next input.

- Please use the channel editing screen when using the EDD MEGATERM.

Reading out of whole channel programs

- Though the command CH reads out contents of channel program, there is an exclusive command for reading out channel program to prevent unexpected changes.

  ◊ Input the command TC (Tell channel program).

  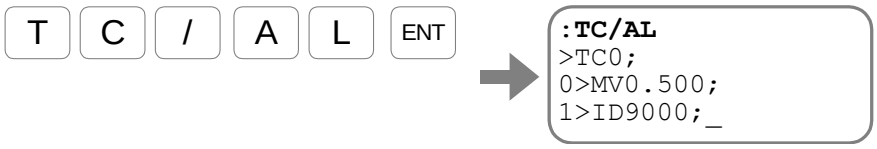

  It reads out the contents of the channel program.

  ◊ Press the [SP] key to scroll the next line.

  ◊ Press the [BS] to abort the readout.

Deletion of channel program

- You may delete all programs in a specified channel.

  ◊ An example below shows how to delete the contents of channel 10.
  Input the command CC (Clear channel).

  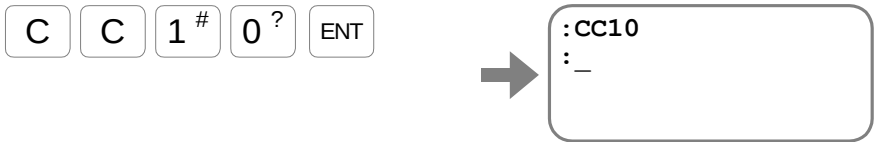

6.3.2.4. Program Sequence

- Though a program is basically consists of parameter settings and positioning commands, the following simple sequence controls can be added within a program.

  ◊ Command JP (Unconditional jump):
  The program execution jumps to the top line of the specified channel

  ◊ Command TI (Dwell timer):
  The program execution pauses for a time set by the timer, then moves to the next line.

  ◊ Parameter OE: (Sequence option edit):
  This parameter controls program-execution sequence between channels. For example, It makes possible to perform continuous program execution of channels with serial channel numbers or execution of channel program of the next channel number with each input of the RUN signal.

Unconditional jump and dwell timer

- An example below describes how to make a program to repeat an incremental 90° motion in the plus direction with a dwell time of one second.

Fig 6-9: Example of unconditional jump and dwell timer

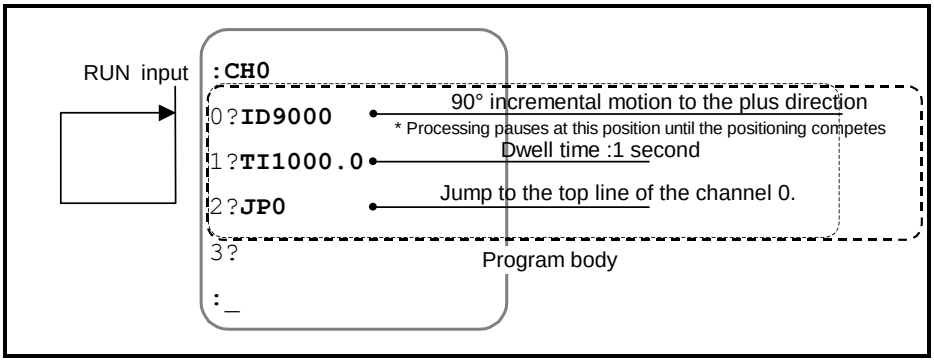

- Specify the channel 0 by the input PRG (Internal program channel select), then input the input RUN (Start program). This repeats an incremental 90° motion in the plus direction with a dwell time of one second.

Fig 6-10: Signal timing of unconditional jump and dwell timer

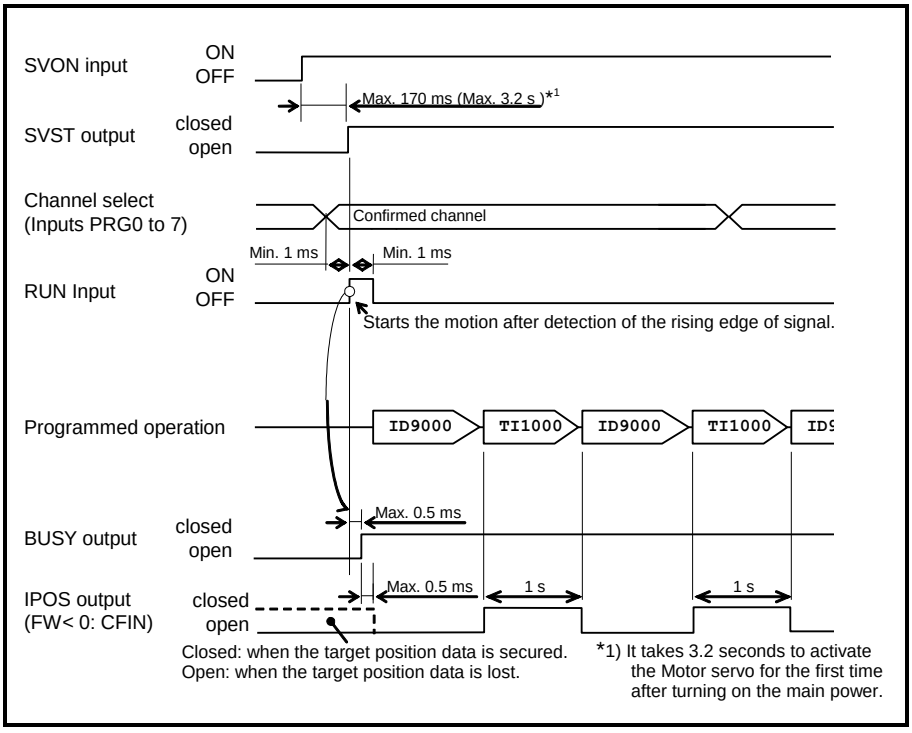

Sequence code: Continuous positioning between channels (with input RUN)

- An example below describes how to program an operation alternating an incremental 90° positioning into the plus and the minus directions by activating the input RUN.

Fig 6-11: Sequence code: Continual positioning between channels (with input RUN)

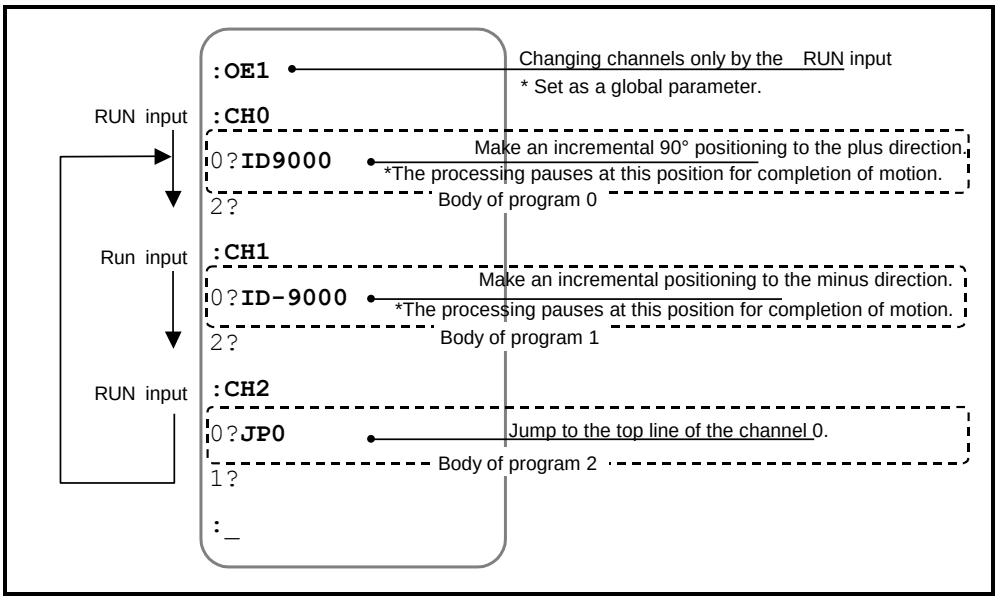

- Specify the channel 0 by the PRG input (Internal program channel selection) and activate the RUN input. This starts an incremental 90° positioning to the plus direction.
  - ◊ Every input of the RUN signal executes the channel program of the next channel number regardless of the state of PRG input.

- Activation of the commands MS (Motor stop), the input STP (Stop), the alarms and the warnings will internally reset the number of channel, which is next in line for execution. In such a case, select the channel by the PRG input, and start the program by the input RUN again.

Fig 6-12: Signal timing: Continual positioning between channels (with input RUN)

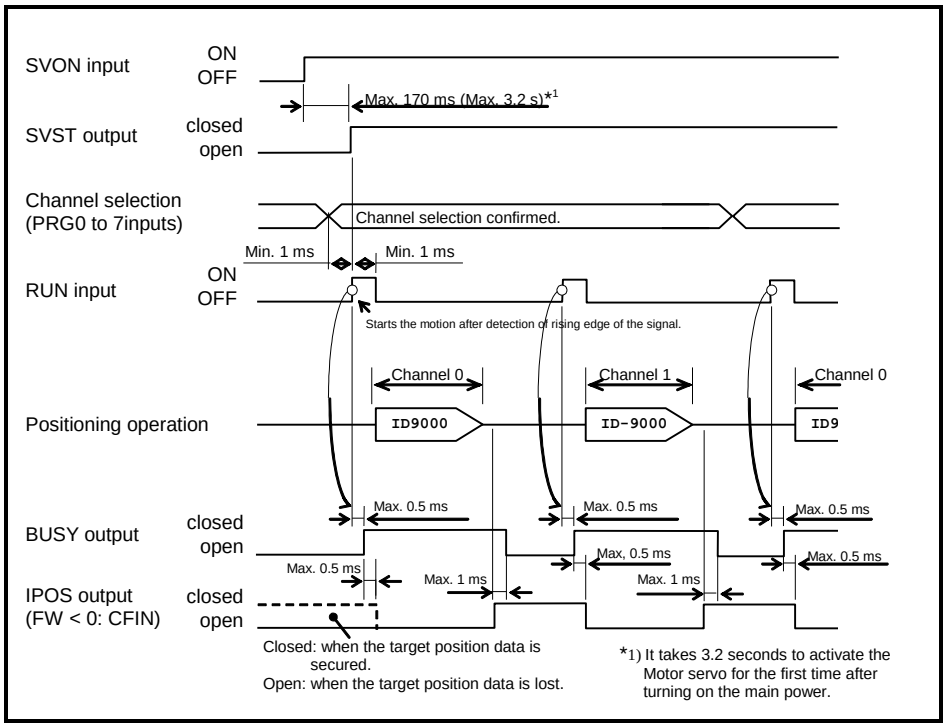

Sequence code: Continual positioning between channels (without the input RUN)

- An example below describes how to program an operation alternating the incremental 90° positioning into the plus and the minus directions. Set a dwell time of one second between each positioning.

  ◊ Make the motion program to different channels in the following example.

Fig 6-13: Sequence code: Continual positioning between channels (without the input RUN)

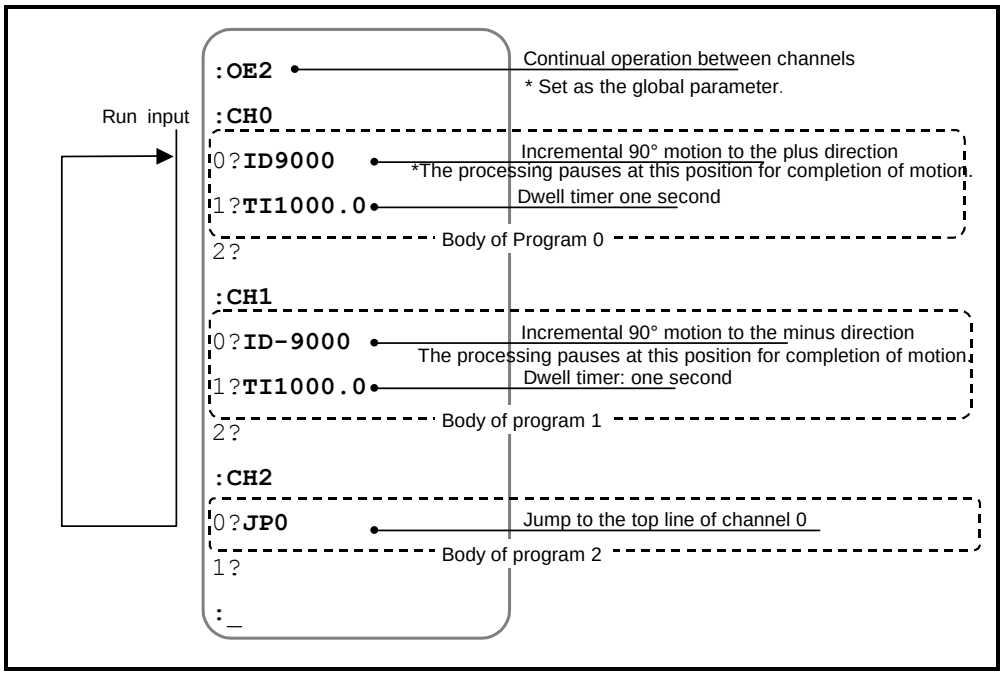

- Specify the channel 0 by the input PRG, then input the RUN signal to alternate the incremental positioning of 90° to the plus direction and the minus direction having one second dwell time between.

Fig 6-14: Signal timing: Continual positioning between channels (without input RUN)

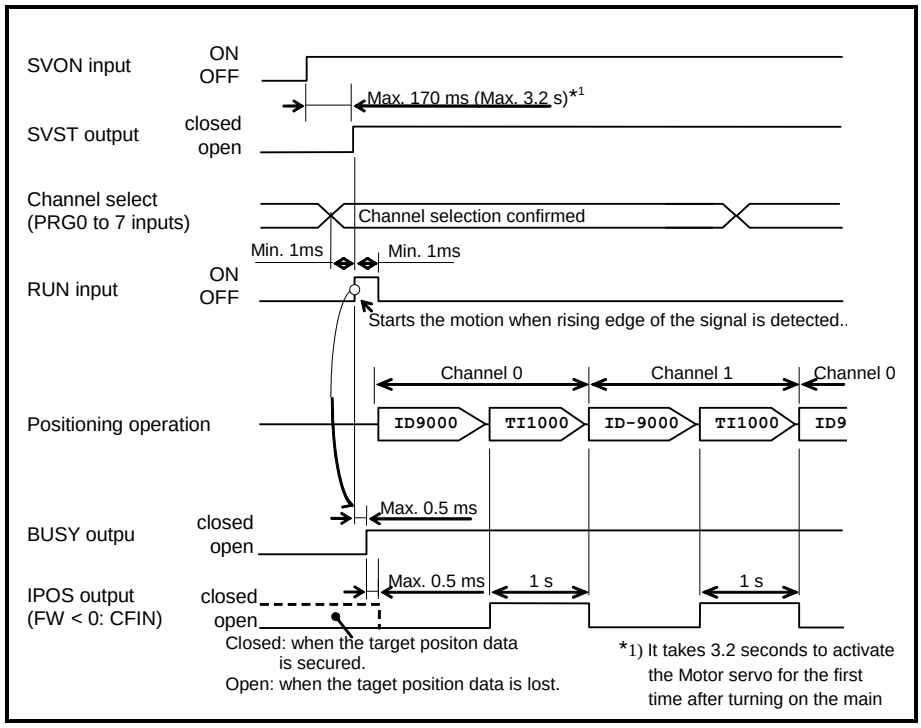

6.3.3. Pulse Train Command Positioning Operation

- An input of pulse train command through the inputs of CWP (pulse train, CW) and CCW (pulse train, CCW) of the CN2 connector (Input/Output) controls a positioning operation. The frequency of input pulse determines rotational velocity while the total number of inputted pulse determines the rotation amount.

Fig 6-15: Pulse train command operation and resolution

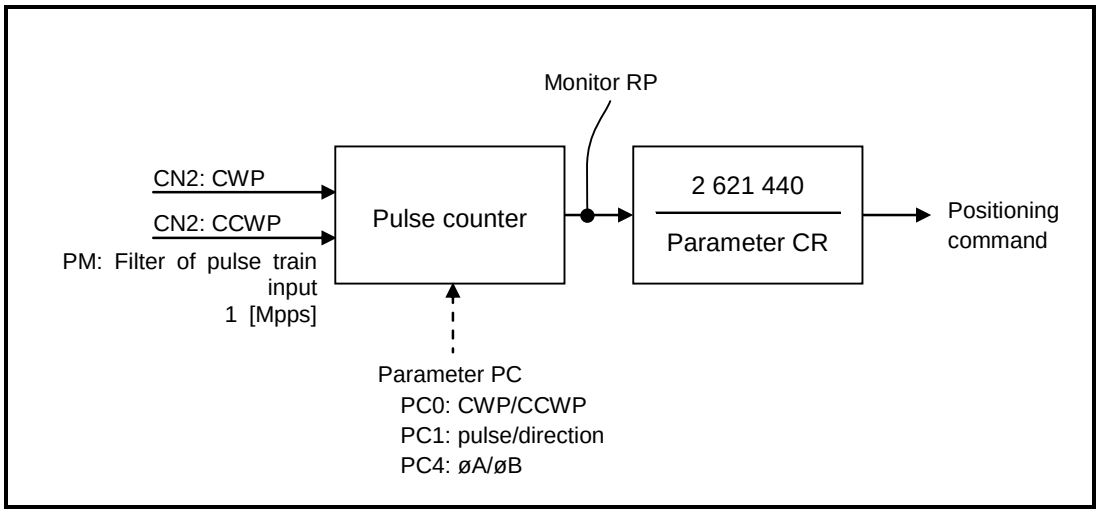

Table 6-9: Input/Output and parameters related to pulse train command positioning

Category	Name (code)	Function	Initial setting	Data range (description)	Unit
Control input	CWP+	CW pulse train, (+) direction	–	The pulse train command rotates the Motor in the plus direction.	Format of pulse & direction and øA/øB are also available.
	CWP–	CW pulse train, (–) direction	–		
	CCWP+	CCW pulse train, (+) direction	–	The pulse train command rotates the Motor in the minus direction.	
	CCWP–	CCW pulse train, (–) direction	–		
Control output	IPOS	Reports completion of positioning.	–	Open: Positioning uncompleted. Lost the target position. Closed: Positioning completed. The target position secured.	–
	TEU	Reports that the position error is under the threshold.	–	Open: Out of the threshold. Closed: Cleared the threshold.	–
Parameter	★CR	Resolution of pulse train input.	2 621 440	0: 5 242 880 for one revolution or 1 000 to 5 242 879	Count/revolution
	PM	Filter of pulse train input	1	1,2, 4	Mpps
	★PC	Selects the format of pulse train command.	0	0: CW/CCW 1: pulse/direction 4: øA/øB quadrupled	–
	TEU	Threshold of the output TEU.	0	0 to 2 621 439	pulse
Monitor	RP	Monitors the state of pulse train input counter.	0	-2 147 483 648 to 2 147 483 647	Count
	TN	Monitor the current position. (Unit: CR)	–	0 to CR^{-1}	360°/parameter CR
	TNC	Monitors position command (Unit: CR)	–	0 to CR^{-1}	

★: The password is required.

- The following show a typical example of the pulse train command positioning.

Fig 6-16: Signal timing of pulse train command positioning

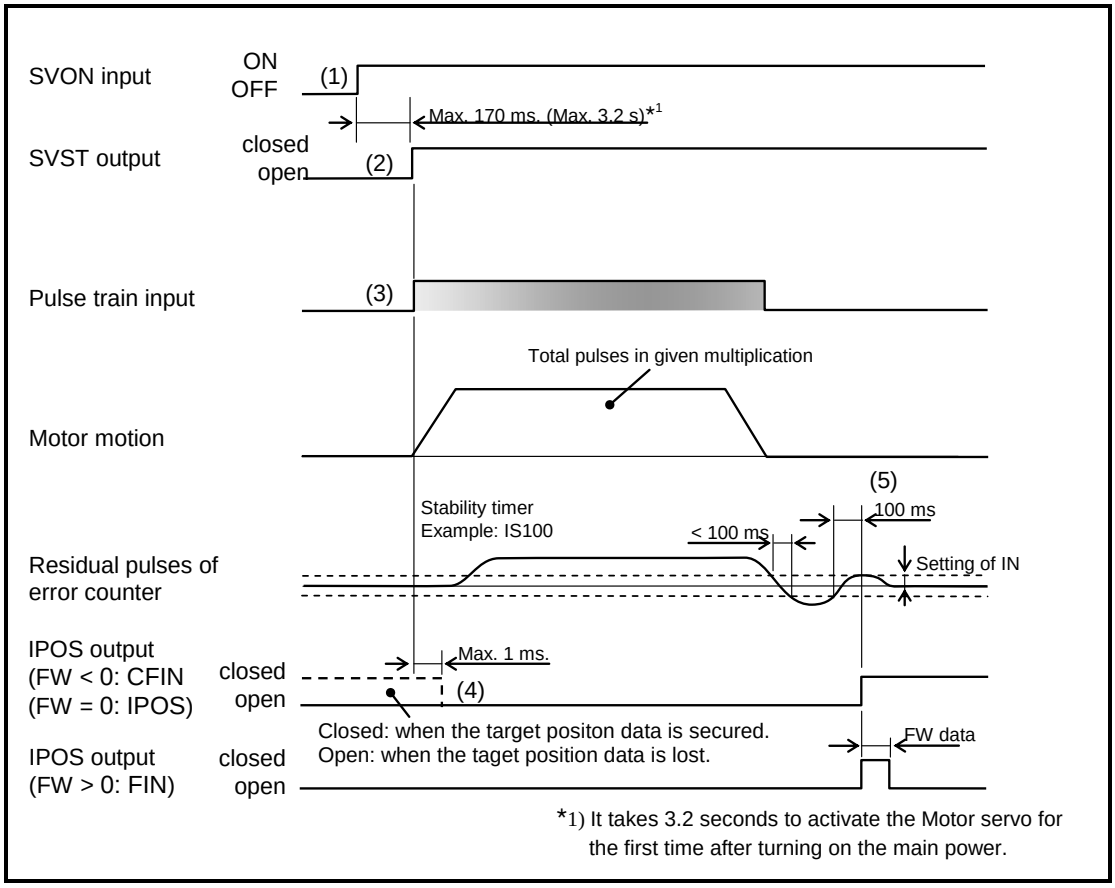

(1) Activates the input SVON (Servo on) to turn the Motor servo on.

(2) The output SVST (Servo state) closes when the Motor servo is turned on.

◊ Inputted pulses before closing the output SVST won't be counted.

(3) Input the pulse train. The Motor rotates the amount of value set by the parameters PC (Pulse command) and CR (Circular resolution).

(4) The input IPOS is forcibly opened when the pulse train command is detected.

◊ When the pulse train input is detected, the state of IPOS is forced to become open. If the pulse train pauses more than 0.1ms, in-position will be occurred at the timing of (5) in the diagram above. In this case, increase the parameter IS (In-position stability timer).

(5) A positioning completes when the pulse train input stops and the position error counter clears the conditions set by parameters IN (In-position threshold) and IS (In-position stability timer).

- When the pulse train input is detected, the state of IPOS is forced to become open. If you wish to output to see if there is the position error or not, use TEU output.
  Refer to "8.3.2.1. Position Error: TEU (Position Error, Under) and TEO (Position Error, Over)" for the output TEU.

6.3.3.1. Format of Pulse Train Input

- The parameter PC (Pulse train format) sets the format of pulse train input signal.

Table 6-10: Signal format of pulse train command operation

Parameter PC	Pulse input format	CWP input	CCWP input
PC0 (shipping set)	CW/CCW	Inputs pulse train for rotation in the plus direction.	Inputs pulse train for rotation in the minus direction.
PC1	Pulse and direction	Selects the rotational direction. OFF: Plus direction ON: Minus direction	Inputs a pulse train.
PC4	øA/øB (quadrupled) 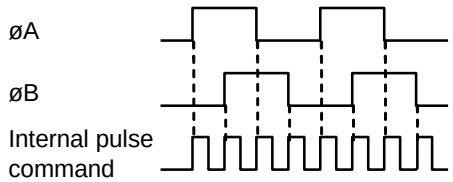 	Inputs pulse train for øA	Inputs pulse train for øB.

6.3.3.2. Resolution of Pulse Train

- The parameter CR (Circular resolution) can set the umber of pulses to make the Motor one revolution. The Driver Unit controls the leftover pulses caused by dividing. (The origin of the dividing calculation is the Home position of the position scale.)

  ◊ For an example, set the CR to 360 000 pulses for one revolution.

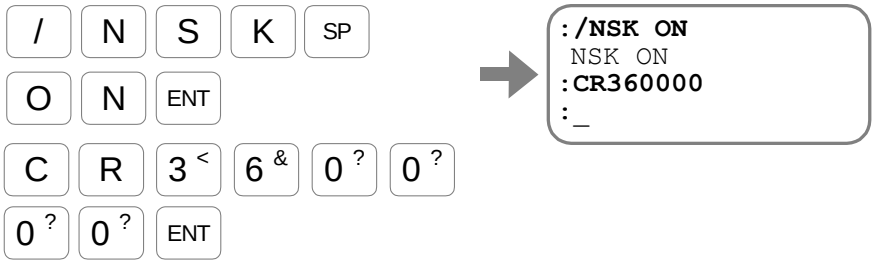

- The pulse train input frequency is up to 2 Mpps. This means that the maximum frequency of the quadrupled øA/øB format is 8 M [count/sec]. When the parameter CR is set to 1 000 000 [count/revolution] in this case, the maximum rotational velocity is 8 s^{-1} as shown bellow.

  ◊ 8 000 000 [count/sec] /1 000 000 [count/revolution] = 8 s^{-1}

◆ Motor motion for the first pulse of the pulse train

- When the parameter CR is set, the System sets grids on the position scale, which number is the same as the division of one revolution with the value of parameter CR, starting from the origin of the position scale. The positioning operation depends on the position of these grids.

- However, the position of the Motor right after turning on the servo deviates from the position of the grid in most cases. For this reason, the first pulse of a pulse train command compensates the difference between the current Motor position and the grid.

- Figure 6-17 below shows how the first pulse of a pulse train command compensates the Motor position when the CR is set to CR327 680. In this case, the Motor motion distance for one pulse of the pulse train input is equivalent to eight pulses of the Motor internal resolution.
  (2 621 440/327 680 = 8 [pulse])
  The Motor motion for the first pulse of the pulse train input in this case is:

  ◊ In the plus direction: Less or equal to 8 pulses of the Motor resolution

  ◊ In the minus direction: Greater or equal to 8 pulses and less or equal to 16 pulses of the Motor resolution

Fig 6-17: Motor motion for the first pulse of a pulse train input

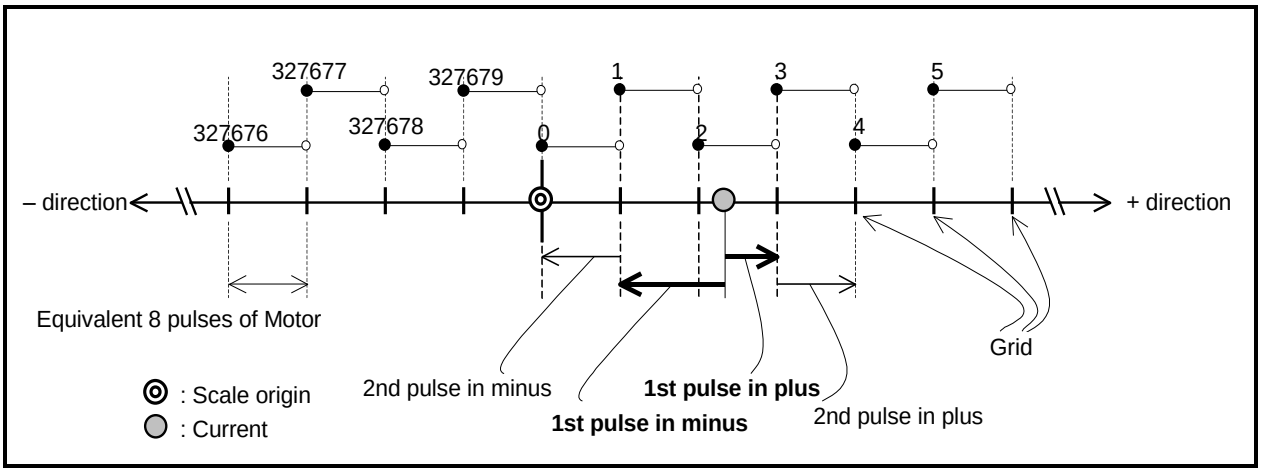

6.3.3.3. Input Timing

⚠ *Caution : The following show the timing of accepting pulses. In addition to the conditions shown below, the maximum rotational speed of the Motor places restrictions. Set the input pulse frequency so that the Motor does not exceed its maximum rotational speed.*

⚠ *Caution : When applying an input pulse frequency of 1 Mpps or more, it is necessary to change the setting of the parameter PM for the filter of pulse train input.*

- Refer to "2.5 Motor Specifications" for the maximum rotational speed.

Fig 6-18: When the parameter is set to PC0 (CW/CCW format, PM2)

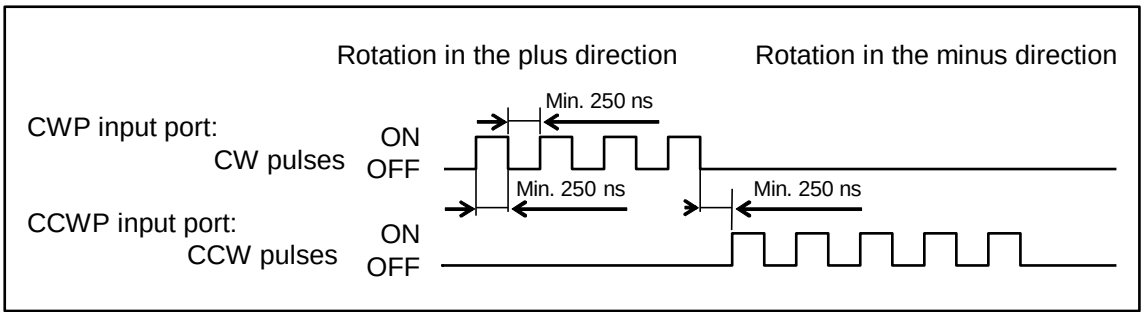

Fig 6-19: When the parameter is set to PC1 (Pulse and direction format, PM2)

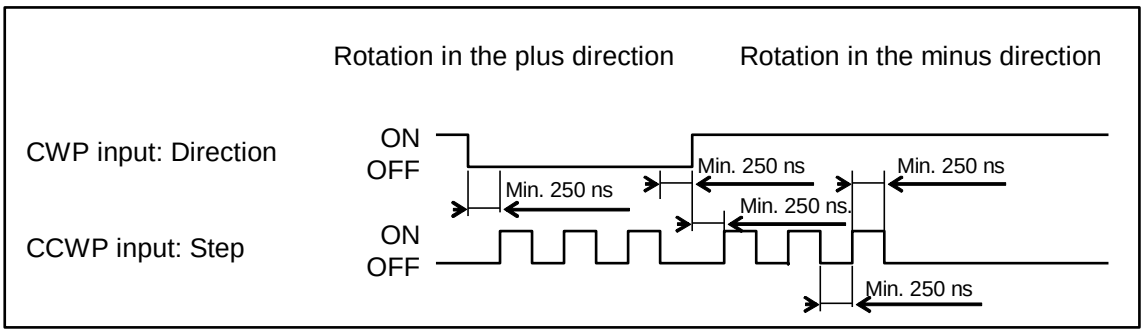

Fig 6-20: When the parameter is set to PC4 (øA/øB format, PM2)

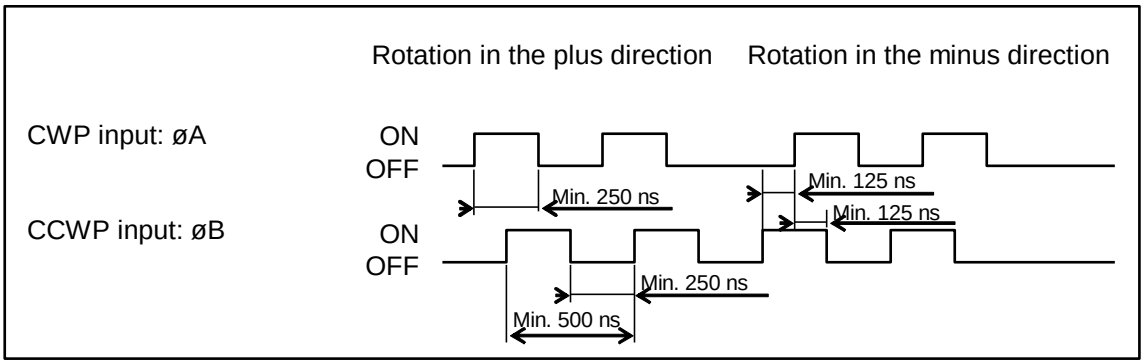

6.3.4. Jogging

- Jogging can be proceeded via either the signals of control Input/Output or RS232C communication.
- Table 6-11 below lists the parameters related to the jog operation. Refer to "9. Details of Command and Parameter" for more details.

Table 6-11: Commands and parameters related to jog operation.

Category	Name (code)	Function	Initial setting	Data range	Unit
Control input	JOG	Starts a jogging operation.	–	OFF: Decelerates and stops. _ON: Starts accelerating.	–
	DIR	Jogging direction.	–	OFF: in the plus direction. _ON: in the minus direction	–
Command	JG/PL	Specifies a jogging operation in the plus direction (one direction)	–	–	
	JG/MI	Specifies a jogging operation in the minus direction (one direction)	–	–	
Parameter	JV	Specifies the jogging velocity.	0.100	0.001 to 10.000	s^{-1}
	JA	Specifies the jogging acceleration.	1.0	0.1 to 800.0	s^{-2}
	JB	Specifies the jogging deceleration.	0.0	0.0: Use JA. 0.1 to 800.0	
	CSA	Specifies the acceleration profiling.	1	0: Set by CSA. (CSB only) 1: Constant acceleration 2: Modified sine 3: Modified trapezoid 4: Cycloid 5: Half sine	
	CSB	Specifies the deceleration profiling.	0		

6.3.4.1. Jogging with Control Input and Output

- This section describes procedures to perform a typical jog operation via control inputs and outputs

Fig 6-21: Signal timing of a jogging operation via control Inputs and Outputs

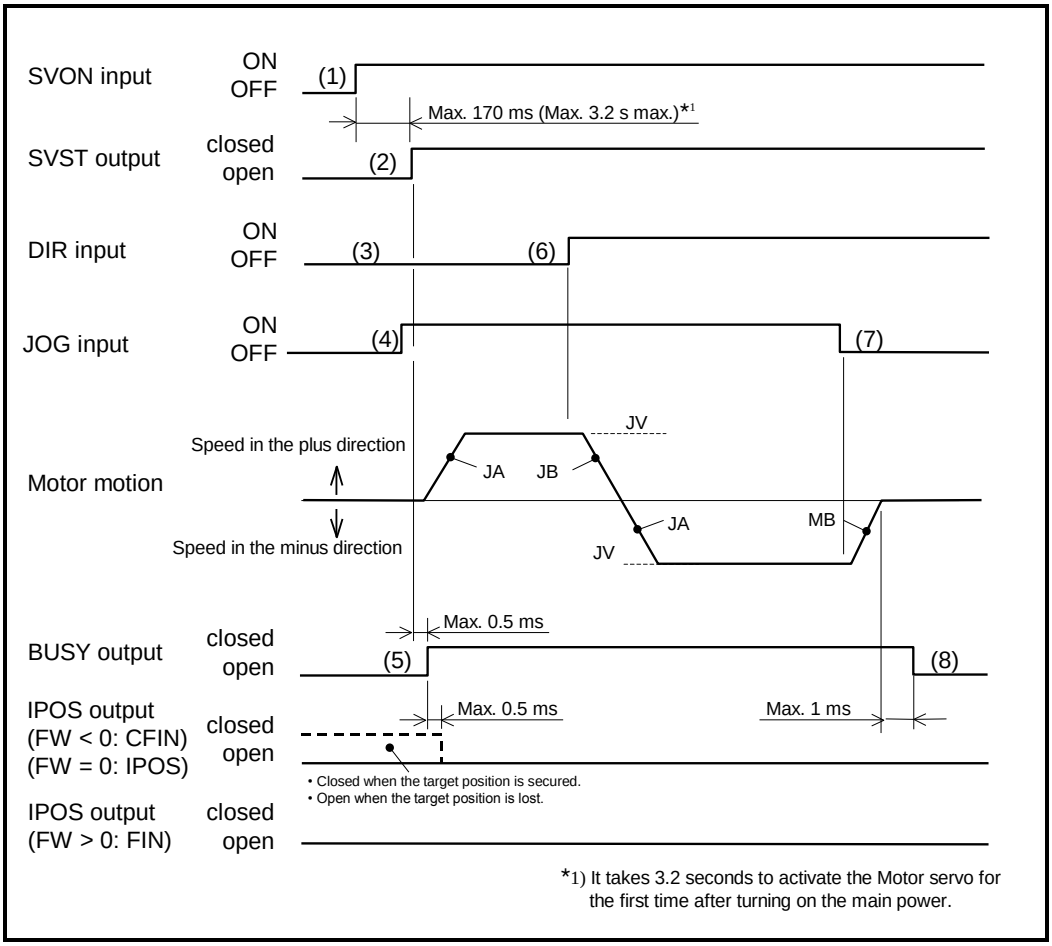

1) Turn on the Motor servo by the input SVON (Servo on).
2) The output SVST (Servo state) closes when the Motor servo is on.
3) Set the jogging direction by the input DIR (Jog direction).
4) Activates the input JOG (Jog).
   The Motor starts a motion following the parameter value of JA (Jog acceleration), JB (Jog deceleration) and JV (Jog velocity).
5) The output BUSY (In-operation) closes when the Motor is jogging and the output IPOS (In-position) opens.
6) When the input DIR is altered in the middle of jogging, the Motor decelerates and stops, then the Motor starts in the specified direction.
7) The Motor starts to decelerate when the input JOG is turned OFF.
8) The output BUSY opens at the completion of inputting the internal command for deceleration. The output IPOS remains open at this time because the jogging started from the position at where the former positioning operation had completed.

- Different from the positioning operation, the output IPOS does not signal the completion of jogging. Confirm the completion of jogging by the output BUSY.

6.3.4.2. Jogging via RS-232C Communication

- The following shows procedures of a typical jogging operation via RS-232C communication.
- When a jogging operation is run via RS-232C communication, regular carriage return after the jogging is started, is strongly recommended, considering a communication failure due to an accident, such as disconnection of cables.

Fig 6-22: Signal timing of jogging via RS-232C communication

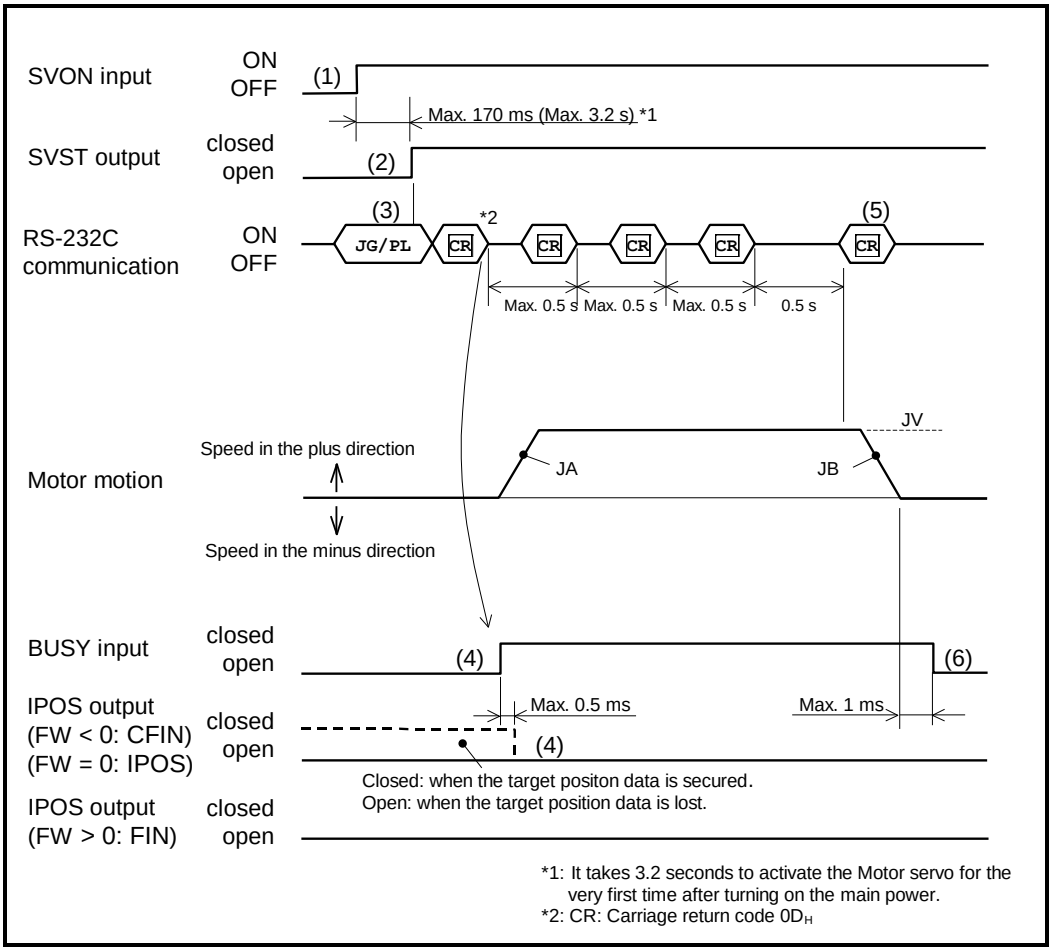

1) Turn on the Motor servo by the input SVON (Servo on).

2) The output SVST (Servo state) is closed when the Motor servo is on.

3) Input the command JG/PL (Jog direction, plus direction).
The Motor starts jogging operation, following the parameter values of JA (Jog acceleration), JB (Jog deceleration) and JV (Jog velocity).

   ◊ Input the command JG/MI for a jogging in the minus direction.

   ◊ Input a carriage return (0Dh) following the command JG within 0.5 seconds. When input of the carriage return stops, the Motor decelerates and stops.

4) The output BUSY (In-operation) is closed during the jogging operation, and the output IPOS (In-position) is open.

5) When the duration of carriage return exceeds 0.5 seconds, the Motor starts to decelerate.

6) The output BUSY opens at the completion of inputting the internal command for deceleration. The output IPOS remains open at this time, since the jogging is started from the position at where the prior positioning is completed.

6.3.5. RS-232C Communication Positioning Operation

- Positioning may be executed directly via RS-232C communication.
- The commands and parameters related to the positioning operations are listed in "Table 6-5: Positioning command and parameter" and the commands and parameters unique to RS-232C communication positioning are listed in "Table 6-12: Command and parameter related to the RS-232C communication positioning" below. Refer to "9. Details of Command and Parameter" for details.

  ◊ Refer to "8.9. RS-232C Communication" for the detail of the way of communication.

Table 6-12: Command and parameter related to the RS-232C communication positioning

category	Name (code)	Function	Initial setting	Value range	Unit
Command	MS	Stops the Motor.	–	–	–
	MY	Stops a Motor cycle.	–	–	–
	SP	Starts a program operation.	–	0 to 255	channel
Parameter	★MM	Changes readout mode of program lines.	1	0: Does not wait for an input of the key for multiple line readout. 1: Wait for an input of the key for multiple line readout.	
	★WM	Sets the parameter backup function.	0	0: Backups the parameters on the EEROM. 1: Nullifies the backup function.	
	★EC	Reports completion of positioning via RS-232C.	0	0: Does not output "!" at the completion of positioning. 1. Outputs "!" at the completion of positioning.	
	★PP	Sets availableness of local parameter prompt.	1	0: Nullifies function of indicated parameter prompt. (:) 1: Enables function of indicated parameter prompt. (:>)	

★: The password is required.

⚠ *Caution : Please note that there is the limit for the number of times of overwriting commands and parameters to the memory.*

- The Driver Unit has an EEPROM for the data backup. The EEPROM has the limitation on the number of times for writing and deleting data. (Approximately 100 000 times) Therefore, we recommend setting the command WM to prohibit writing to the EEPROM when the internal parameters are frequently changed from the master controller during operation. However, setting of the command WM is not necessary for commands and parameters that do not require the backup.
- Parameters that are categorized as "parameter" in "9. Details of Command and Parameter" will be backed up on the EEPROM.

- The following describe the procedures of a typical RS-232C communication positioning.

Fig 6-23: Signal timing of an RS-232C communication positioning

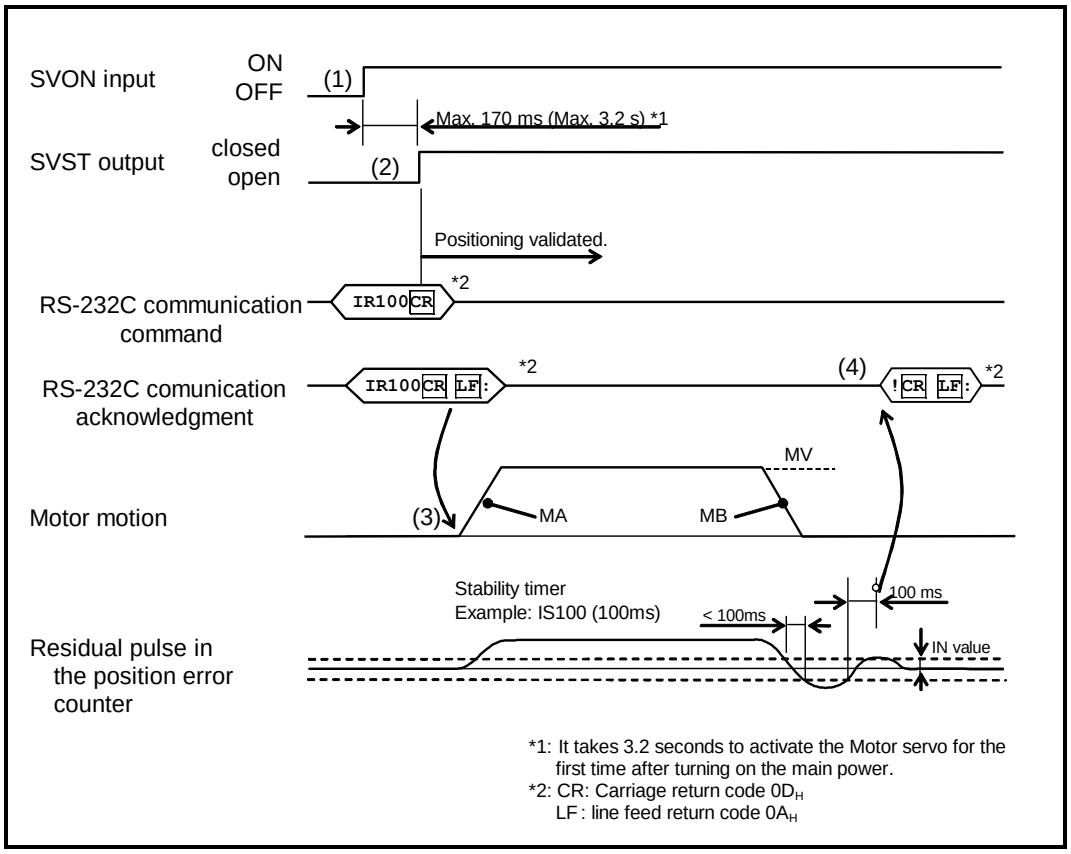

1) Activate the input SVON (Servo on) to turn the Motor servo on.

2) When the Motor servo is on, the output SVST (Servo state) closes. This is the state when the command can be inputted. If you do not check the output SVST, provide delayed timing after an activation of the input SVON as shown in "Fig 6-23: Signal timing of an RS-232C communication positioning."

3) The positioning operation starts right after the input of positioning command.
The positioning is executed following the parameter values of MA (Rotational acceleration), MB (Rotational deceleration) and MV (Motor velocity).

4) The positioning complete when the position error counter clears the condition set by the values of parameter IN (In-position) and IS (IN-position stability timer). If the parameter EC (End code) is set to EC!, completion of positioning is notified by "!".

6.3.6. Velocity and Torque Control by Analog Input

⚠ *Caution : Individual motors have the maximum rotational velocity. Check the maximum rotational velocity of the Motor not to exceed its rotational velocity.*

⚠ *Caution : With the analog input based on the upper limit velocity of the feedback signal and the resolution of the analog input command, positioning accuracy may not be expected for positioning operations.*

⚠ *Caution : The parameter AF for analog command voltage offset is not tuned for the Driver Unit when shipped, so tune the offset after connecting to your controller.*

- An input of AIN+/AIN- (analog input) of the CN2 connector (Input/Output) inputs an analog voltage command to control velocity and torque.

6.3.6.1. Selection of Control Mode

- Set the control mode by the parameter SL for control mode selection.

Table 6-13: Control mode

Parameter	Control mode
SL1	Torque control mode
SL2	Velocity control mode
SL3	Positon control mode

- In the velocity control mode and torque control mode, either RS-232C communication operation or analog command input operation can be selected.
  Operation selection is performed by the parameter AC for analog command input selection.

Table 6-14: Set program

Parameter	Program
AC 0	Analog command input ineffective, DC command effective
AC 1	Analog command input effective, CW direction at the time of input polarity + voltage input
AC -1	Analog command input effective, CCW direction at the time of input polarity + voltage input

6.3.6.2. RS-232C Communication Operation

- In the velocity control mode and torque control operation, the Motor rotational velocity and output torque can be directly controlled by the RS-232C communication command.

- Setting of the parameter AC (AC0) enables the DC command.
  Then, the Motor is controlled by the rotational velocity and the output torque proportional to the data value.

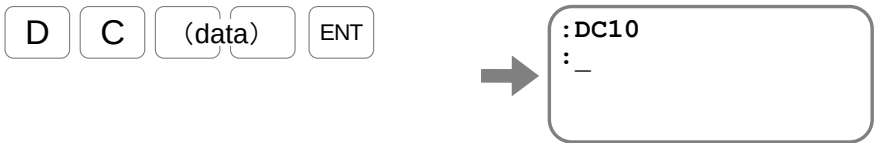

- Fig 6-24 shows the relationship between the DC command data, and the rotational velocity and output torque.

Fig 6-24: Communication operation command, and Motor rotational velocity and output torque

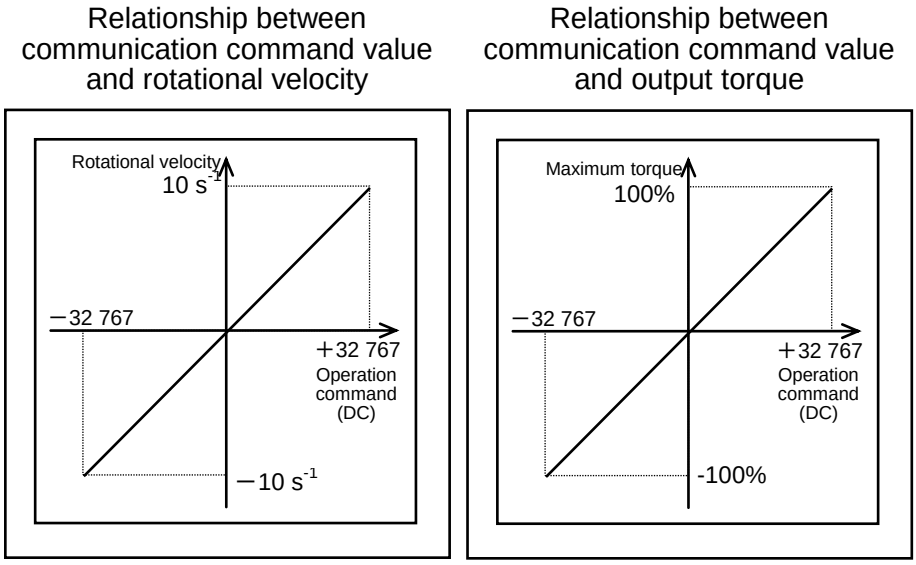

⚠ *Caution*
- *Depending on the parameter DI setting, the polarity of the DC command is reversed.*
- *The shipping set value of the parameter DI is "0."*
  (The CW direction viewed from the Motor rotor is count-up.)
- *The rotational velocity of the Motor is limited depending the Motor type.*

6.3.6.3. Analog Input Operation

- In the velocity control mode and torque control operation, the Motor rotational velocity and output torque can be directly controlled by the analog input command input.
- Analog command voltage range is ± 10 [VDC]. Setting of the parameter AF enables offset tuning. For details, refer to "6.3.6.4 Analog Command Input Offset."
- The polarity of command voltage can be selected by the parameter AC for analog command input selection. Refer to "Table 6-15: Analog input operation, rotational direction" for the setting regarding the polarity and rotational direction of the command.
- The relationship between the command voltage, and the rotational velocity and output torque can be changed by the parameter AG for analog command gain. Refer to "Fig 6-25: Command voltage, and Motor velocity and output torque (AC1 and DI0)" for command voltage and rotational velocity.

Table 6-15: Analog input operation, rotational direction

DI	AC	Command voltage	Motor rotational direction
0	1	+	CW
0	1	-	CCW
0	-1	+	CCW
0	-1	-	CW
1	1	+	CCW
1	1	-	CW
1	-1	+	CW
1	-1	-	CCW

Fig 6-25: Command voltage, and Motor velocity and output torque (AC1 and DI0)

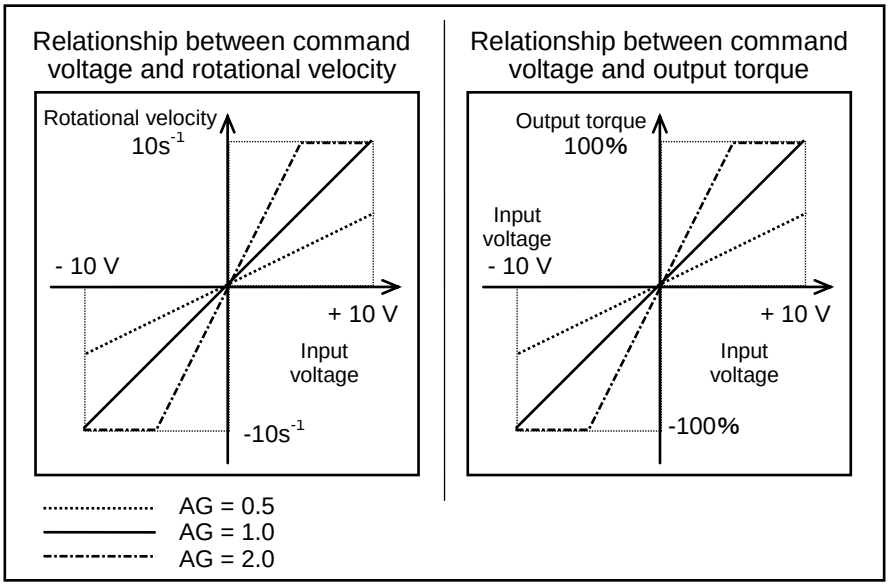

⚠ *Caution • The rotational velocity of the Motor is limited depending on the Motor type.*

- *When using the Motor with the maximum rotational velocity less than 10 [s^{-1}], tune the parameter AG for analog command gain so that the rotational velocity does not exceed the maximum rotational velocity.*

6.3.6.4. Analog Command Input Offset

- Setting of the parameter AF for analog command voltage offset enables tuning of the analog command voltage offset.
- The parameter AF for analog command voltage offset is not tuned for the Driver Unit when shipped, so tune the offset after connecting to your controller.
- The parameter AF for analog command voltage offset is 0.3 [mV] per data, and setting range is AF-3276 to AF-3276.

Fig 6-26: AF-10 (velocity control mode)

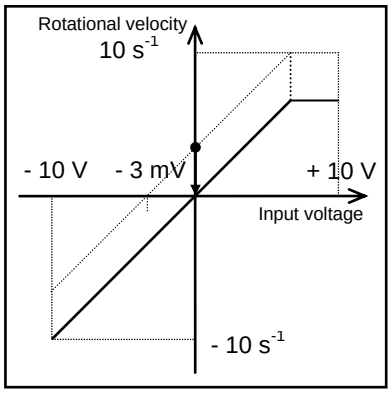

(1) Automatic setting of offset

- Set an offset so that the current input level will become zero.

1) Connect the Driver Unit and your controller to input the analog command 0.

2) Input the password. A password receipt message appears.

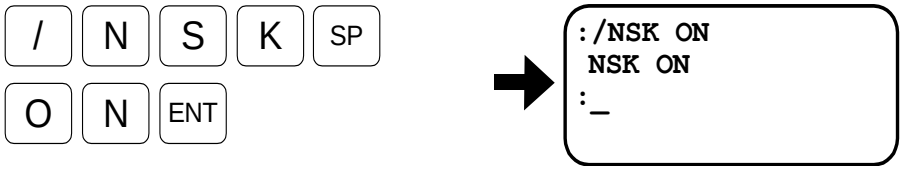

3) Execute the following command.

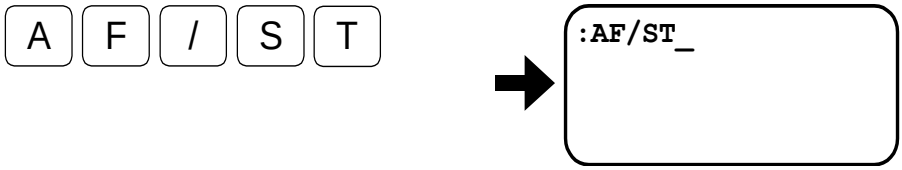

4) Input the ENT key for automatic setting of the offset. The AF value set at this time appears.

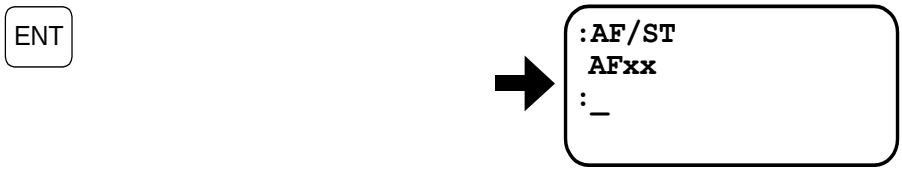

- The unit of the set value is 0.3 [mV].
- "RANGE OVER?" appears when the calculated offset is too large. At this time, the current setting programs are not changed.

(2) Manual tuning of offset

- Set an offset with an analog command monitor.

1) Take a note of the set value of the parameter AC and then set it to AC1.

2) Connect the Driver Unit and your controller to input the analog command 0.

3) Execute the following command to monitor the analog command.

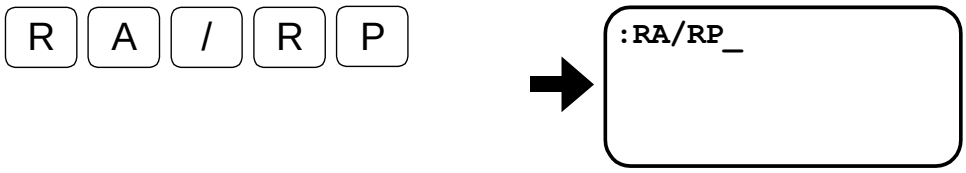

4) After inputting the [ENT] key, an internal command value by analog input appears repeatedly. In this case, since the displayed value is 2, the command voltage has the offset: 0.3 [mV] × 2 = 0.6 [mV].

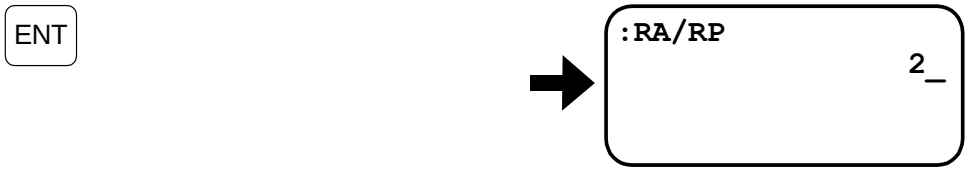

5) After checking the display, press the [BS] key. If you do not press the [BS] key, other commands will not be accepted while the display continues.

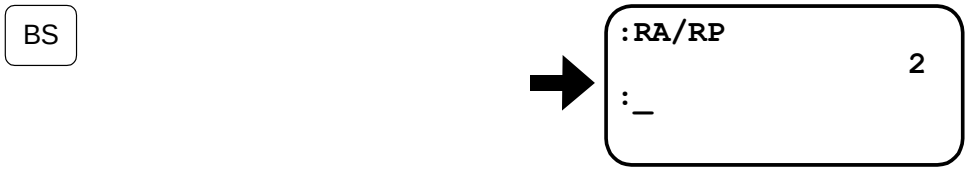

6) Input the password. A password receipt message appears.

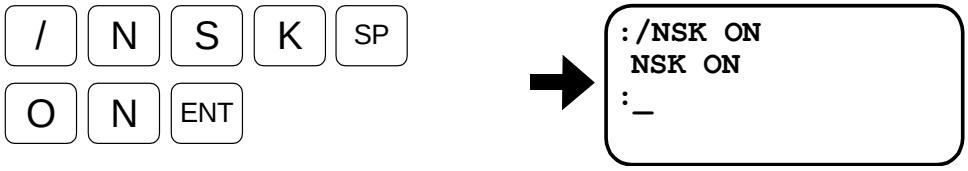

7) Execute the following command. Be careful at this time to input the value monitored by the RA command and the value of opposite sign.

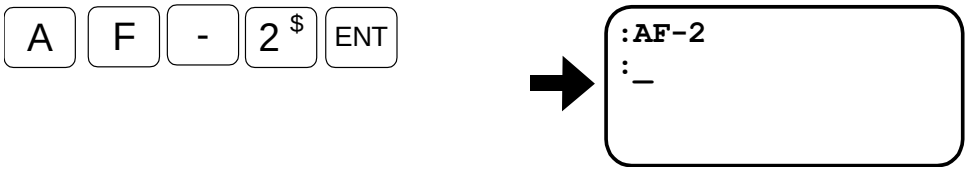

8) Reconfigure the parameter AC saved in 1).

(Blank Page)

7. Operational Function

7.1. Control Input

7.1.1. Emergency Stop: EMST

- The input EMST turns the Motor servo off and stops the Motor by the dynamic brake.

Table 7-1: Signal logic of the input EMST (shipping set: normally closed)

Logic	Description
OFF	Emergency stop
ON	Normal

◊ The shipping set of polarity of the input EMST is the normally closed contact (B contact). It can be changed to the normally open contact. Refer to "8.1.3.1. Editing Control Input Function" for the way of changing the polarity.

- If the input EMST is turned OFF, the Motor servo is off and it stops by the dynamic brake.
- No operation commands are accepted while the input EMST is OFF.
- The output DRDY (Driver Unit ready) opens in the state of emergency stop.

Table 7-2: State of emergency stop

7 segments LED	Command TA (Tell alarm status)	Description	Motor state
F4	**F4 > Emergency Stop**	Emergency stop	Servo-off

- The state of emergency stop may not be established if the input EMST signal is not being OFF longer than 1 [ms].

Fig 7-1: Signal timing of the input EMST.

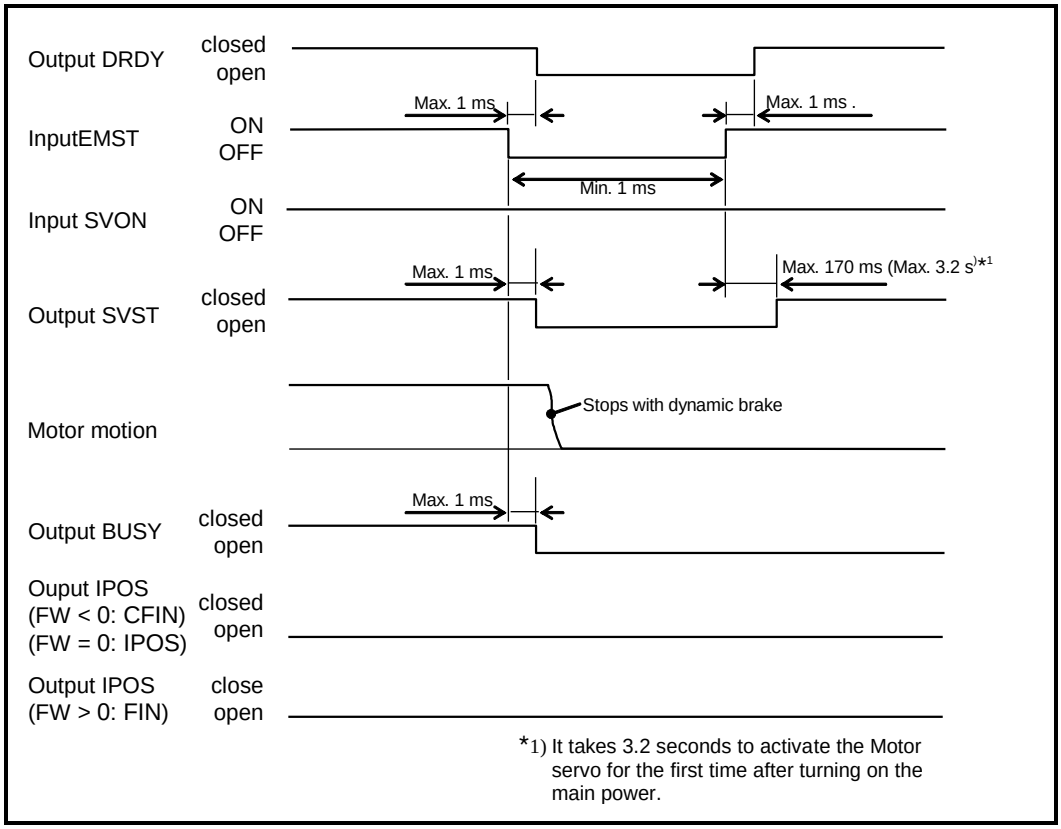

7.1.2. Alarm Clear: ACLR

- This input clears a warning.

Table 7-3: Signal logic of the input ACLR

Logic	Description
↓ (ON → OFF)	Not effective
↑ (OFF → ON)	Clears alarm.

- A rising signal of the input ACLR from OFF to ON clears a warning while the output WRN (Warning) is closed.
- The state of the Motor servo returns to the same condition before the warning is occurred. (Provided that no input, such as the input SVON, is given to change the state of servo.
- The table below lists the warning that is given by the output WRN.

Table 7-4: Warning to be reported by the output WRN

'7 segments LED	Command TA (Tell alarm status)	Description	Motor condition
A3	**A3>Over Load**	Software thermal over	Servo-off
A5	**A3>Origin Undefined**	Home position undefined.	No change
C0	**C0>Pulse Command/Feedback Error**	Error in the commanded position or the feedback signal.	Servo-off
F1	**F1>Excess Position Error**	Excessive position error	Servo-off
F5	**F5>Program Error**	Program error	Cycle stop
F8	**F8>AT Error**	Automatic tuning error	Cycle stop
P5	**P5>Main AC Line Under Voltage**	Low voltage of main power	Servo-off

Fig 7-2: Signal timing of the input ACLR

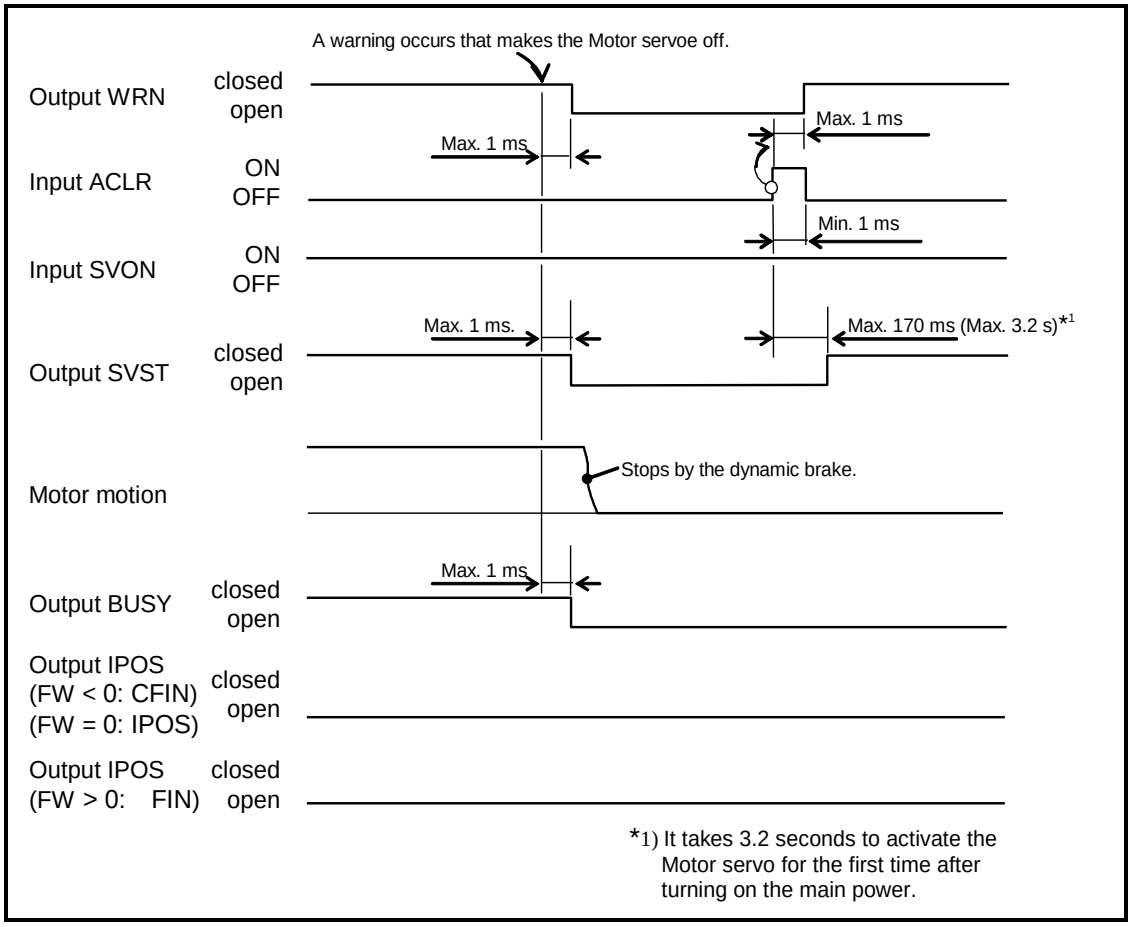

7.1.3. Hardware Over Travel Limit: OTP and OTM

- An input signal of over travel limit sensor to stops the Motor.
- This is provided to set the off-limits area within the Motor rotation range.

Table 7-5: Signal logic of the inputs OTP and OTM (Shipping set: normally closed)

Logic	Description
OFF	Travel limit
ON	Normal

◊ Shipping set of inputs OTP and OTM is normally closed contact. However it can be changed to the normally open contact. Refer to "8.1.3.1. Editing Control Input Function" for details.

- Set the OTP for the limit in the CW direction and the OTM for the limit in the CCW direction, looking from the Motor output axis side as shown in the figure below.

◊ These directions are not affected by the parameter DI.

Fig 7-3: Setting of the hardware over travel limit

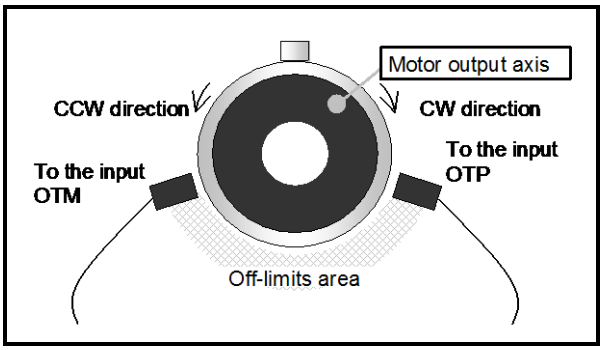

- The System recognized the alarm state of the hardware over travel when it detects input of OTP or OTM. The Motor stops immediately without servo-off when the limit in the same direction of its rotation is detected. In this state, the System only accepts the positioning command moving in the opposite direction of the detected limit.
- Output OTPA or OTMA (Travel limit detection) opens in the alarm state of hardware over travel.

◊ Refer to "7.2.3. Over Travel Limit Direction: OTPA and OTMA" for the signal timing of inputs OTP and OTM.

Table 7-6: Alarm state of the hardware travel limit

7segments LED	Command TA: tell alarm	Description	Motor condition
F3	**F3>Hardware Over Travel**	Hardware over travel alarm	Servo-lock

- When the Motor moves into the off-limits area once, the over travel state is maintained until the following command is provided.

◊ Move the Motor in the opposite direction of the detected limit to get out from the off-limits area.

◊ Deactivate the Motor servo and manually move the Motor out of the off-limits area.

- There are following operation commands to get out from the off-limits area.

◊ Input one of the short cut commands AD, AR or AQ. The Motor moves in the direction to get out from the off-limits area (opposite to the entered direction) without fail.

◊ Perform an operation to get out from the off-limits area judging from the Motor entering direction, plus or minus, by the input of OTPA and OTMA, and move the Motor out of the area.

7.1.4. Servo on: SVON

- This input activates the Motor servo.

Table 7-7: Signal logic of the input SVON

Logic	Description
OFF	Servo off
ON	Servo on

- The Motor servo activates when the input SVON is turned on after the power (main power + control power) is turned on and the output DRDY (Driver Unit ready) is closed.

- It takes some time to actually activate the Motor servo by the input of SVON.
  Check the condition of the Motor servo by the output SVST (Servo state).
  - ◊ 3.2 seconds: For the first activation of the Motor servo after turning on the power.
  - ◊ 170 ms: For the second time and later activation of the Motor servo after turning on the power. (The first activation of the Motor servo must be completed.)

- When the input SVON is turned off, the Motor gets in the servo off state and stops by the dynamic brake. At the same time, the errors in the error counter will be cleared.

- When the Motor servo has been activated by the input SVON, execution of the command MO (Motor off) deactivates the Motor servo.

- When the Motor servo has been deactivated by the command MO (Motor off), execution of the command SV (Servo on) activates the Motor servo.

Fig 7-4: Signal timing of the input SVON

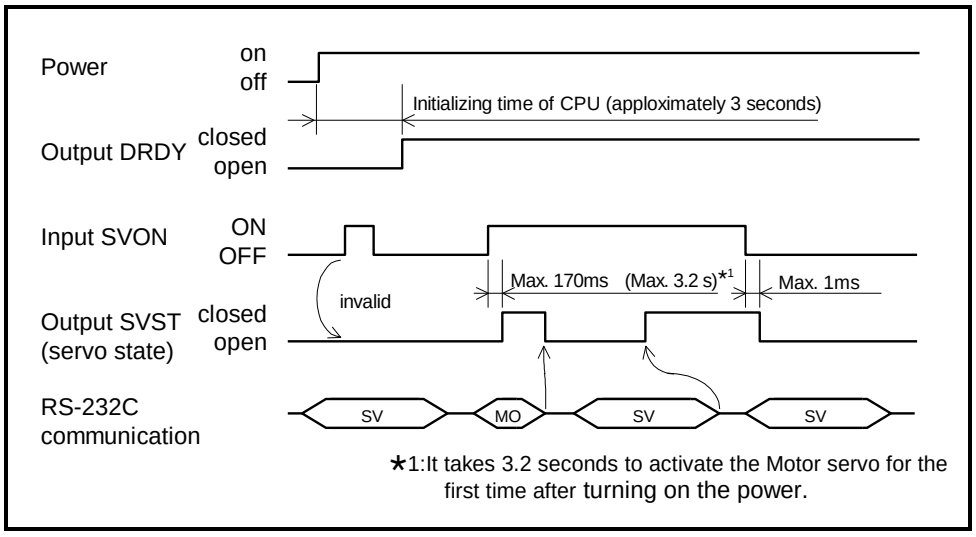

◆ Precautions when the main power and the control power are separately turned on and off.

- When turn on the main power after the control power is on.

  ◊ Activate the input SVON after the main power is turned on.

- When turn off the main power leaving the control power on.

  ◊ Turn off the main power after deactivation of the input SVON.
  The warning P5 (Main AC line under voltage) occurs if the main power is turned off while the Motor servo is on.

Fig 7-5: Timing when separately turning on and off the main power and the control power

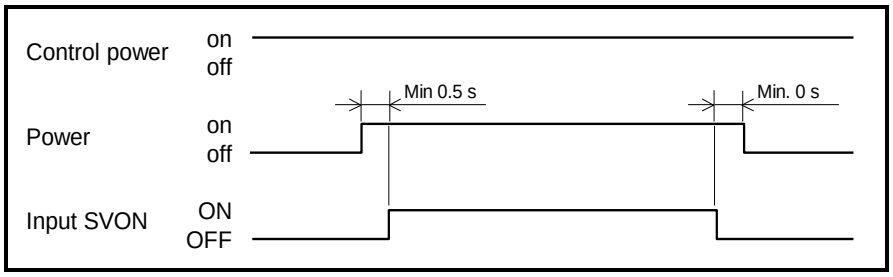

7.1.5. Program Start: RUN
Internal Program Channel Selection: Input PRG0 to PRG7

- This input starts to execute a program.

Table 7-8: Signal logic of the input RUN

Logic	Description
↓ (ON → OFF)	Invalid
↑ (OFF→ ON)	Start program

- The input RUN starts execution of the program in the internal program channel specified by the inputs PRG0 to PRG7.
  - ◊ The channel number is specified by the binary number represented by ON and OFF of the inputs PRG0 to PRG7.

- Please confirm all of the following conditions are met before execution of the program.
  Otherwise, the warning F5 (Program error) occurs.
  1) The System is not in the middle of execution of a program.
     Check if the output BUSY (In-operation) is open.
  2) The channels specified by the outputs PRG0 to PRG7 have the proper settings of commands and parameters.
  3) The conditions to execute the programs in the channels are in place. For example, the Motor servo must be activated if a positioning command is programmed.
  4) There is no alarm or warning is occurred. The input STP (Motor stop) is OFF.

- Refer to "6.3.2. Program Positioning Operation" for the procedures of program positioning operation.

7.1.6. Stop: STP

- This input stops all operations and prohibits entering positioning commands.
- The input can be used for stopping the Motor in the middle of positioning and for the interlock signal for a positioning start command.

Table 7-9: Signal logic of the input STP

Logic	Description
OFF	Positioning
ON	Starts deceleration. Prohibits positioning.

◆ Effects on the internal positioning command

- An activation of the input STP in the middle of positioning caused by an internal command, such as positioning, jogging and Home Return, the Motor decelerates and stops with the deceleration specified at the positioning operation.
  - ◊ Once the input STP activates, the Motor decelerates and stops even the input STP is released in the middle of deceleration.
- When the parameter MD (STP move deceleration) is specified, the System compares the deceleration between the value of parameter MB and MD and applies the higher deceleration. (The System chooses the deceleration to stop the Motor quickly.)

Table 7-10: Parameter related to the input STP

Parameter	Function	Initial setting	Value range	Unit
MD	Deceleration for input STP	0.0	0.0: Applies the deceleration value currently programmed in the positioning. 0.1 to 800.0	- s^{-2}

- The warning F5 (Program error) occurs if a program start command is ON during the STP is ON.

Fig 7-6: Signal timing of the input STP (Internal command)

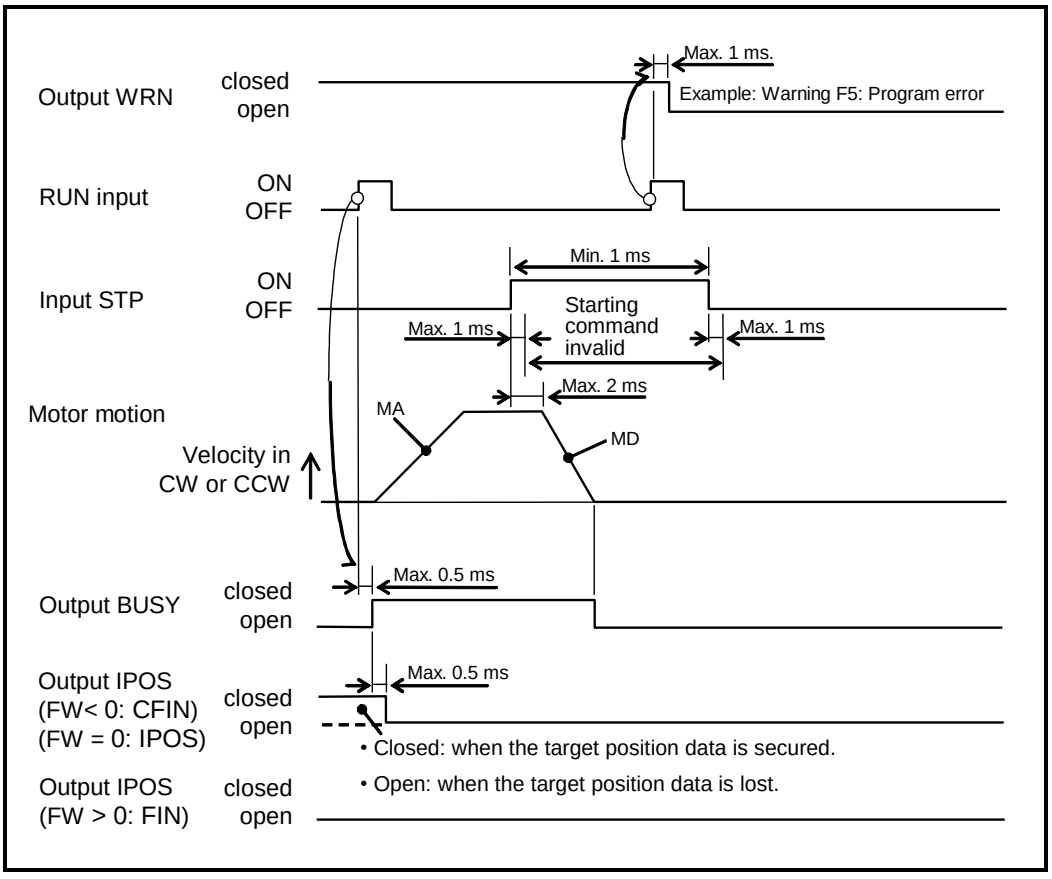

◆ *Effects on the pulse train input*

- The Motor immediately stops when the input STP is activated in the middle of positioning by the pulse train input. This is because the command is regarded as "zero" during the input STP is being active.
- The pulse train input does not move the Motor during the input STP is being active.

Fig 7-7: Signal timing of the input STP (Pulse train command)

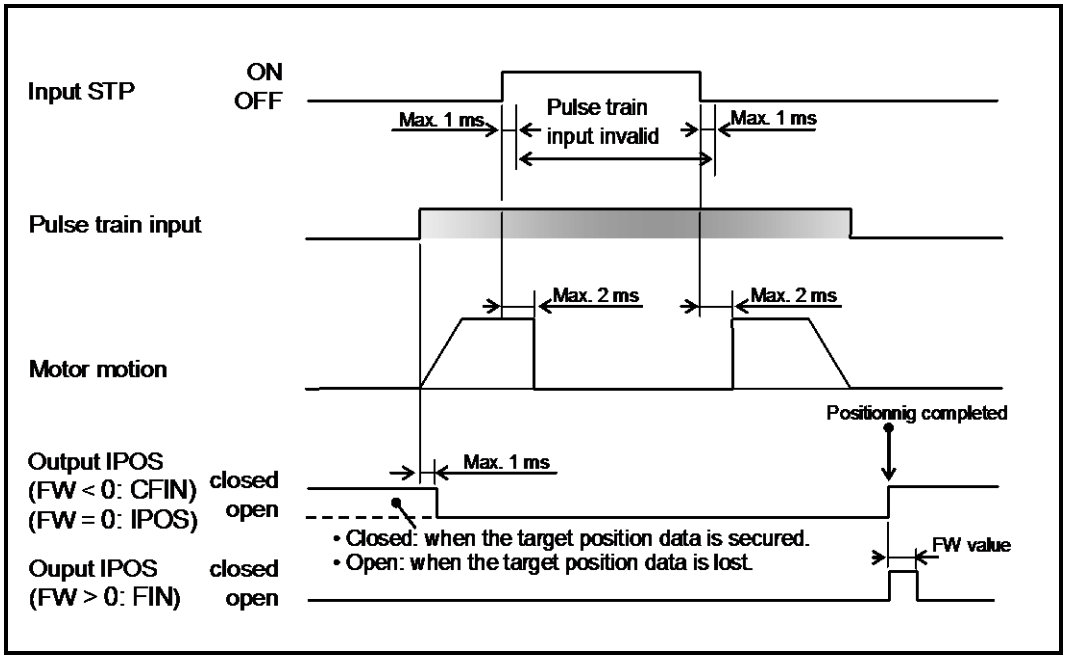

7.1.7. Jogging: JOG
Jogging Direction: DIR

- This input starts a jogging operation.

Table 7-11: Signal logic of the input JOG

Logic	Description
OFF	Starts decelerating.
ON	Start jogging

Table 7-12:Signal logic of the input DIR

Logic	Description
OFF	Plus direction
ON	Minus direction

- Jogging starts when the input DIR specified the rotational direction and the input JOG is activated.
- The Motor decelerates and stops when the JOG input is turned OFF in the middle of jogging.
  - ◊ If the input JOG is turned ON again in the middle of the deceleration, the Motor keeps decelerating and stops once. Then the input JOG activates again after the Motor stopped.
- If the input DIR is altered in the middle of jogging, the Motor starts to move in the opposite direction after it stopped.
  - ◊ If the input DIR is altered in the middle decelerating, the Motor stops anyway, then the input JOG activates again.
- Different from other positioning operations, the jogging operation does not complete by the activation of the output IPOS (In-position). Check the completion of a jogging via the input BUSY (In-operation).
- Refer to “6.3.4. Jogging” for the procedure of jogging.

7.2. Control Output

7.2.1. Driver Unit Ready: DRDY

- This output reports the occurrence of a problem (alarm) that hampers continual operation.
- Connect to the alarm input of the master controller.

Table 7-13: Signal logic of the output DRDY

Logic	Description
Open	Alarm
Closed	Normal

- The output DRDY closes and the output WRN closes if the Driver Unit is in the normal condition, after the main power was turned on and the initialization of CPU completed.
- When an alarm occurs, the Motor servo is deactivated and the Motor stops with the dynamic brake. The output DRDY opens at this moment.
  Refer to "11.Alarm and Warning" for details.

Fig 7-8: Signal timing of outputs DRDY and WRN

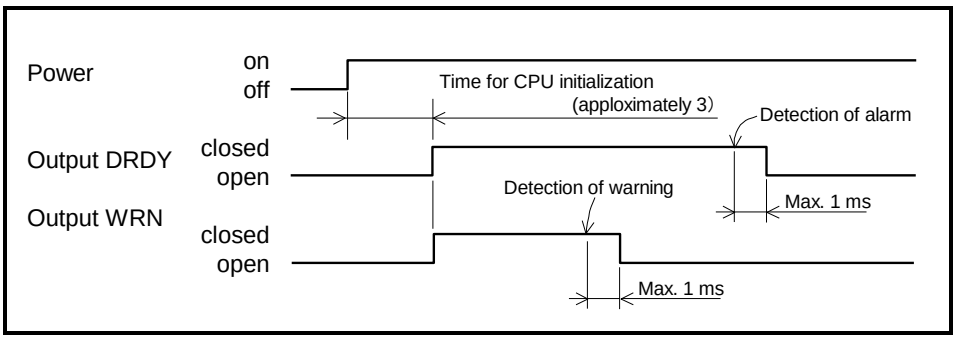

7.2.2. Warning: WRN

- This output reports the occurrence of the problem (warning) that can be rectified by reviewing operation procedure or by tuning of parameters, which do not require the reset of the main power supply for recovery.

Table 7-14: Signal logic of the output WRN (Shipping set)

Logic	Description
Open	Warning
Closed	Normal

- The shipping set of output WRN is the negative logic. However it can be changed to the positive logic.
- Refer to "8.1.3.2. Editing Control Output Function" for details.
- The way of stopping the Motor depends on the warning type.
  Refer to "11.Alarm and Warning" for details.
- The warning can be cleared by the commands CL (Clear alarm) or the input ACLR (Alarm clear).

7.2.3. Over Travel Limit Direction: OTPA and OTMA

- This output reports the entering direction of the Motor to the off-limits area specified by the hardware over travel limits and the software over travel limits.
- This output can be used to determine the direction to get out from the off-limits area.

Table 7-15: Signal logic of the OTPA (shipping set)

Logic	Description
Open	Entered from the plus direction
Closed	Normal

Table 7-16: Signal logic of the OTMA (shipping set)

Logic	Description
Open	Entered from the minus direction.
Closed	Normal

- The outputs of OTPA and OTMA are the negative logic. However, the logic can be changed to the positive logic. Refer to "8.1.3.2. Editing Control Output Function" for the way to change the logic.
- The System gets in the conditions shown in the table below when the output is activated.

Table 7-17: Indication of 7 segments LED when the output is activated.

7segments LED	Command TA (Tell alarm status)	Description
F2	**F2>Software Over Travel**	Software over travel
F3	**F3>Hardware Over Travel**	Hardware over travel

- The direction, plus or minus, of the limit detected by the output OTPA or OTMA depends on the setting of the parameter DI (Direction inversion) and the activated limit OTPA or OPMA as described in the table below.

Table 7-18: Limit direction and outputs OTPA and OTMA

Parameter DI	Activated output	Activated limit (entering side)	
		Hardware	Software
0	OTPA	OTP	OTP
	OTMA	OTM	OTM
1	OTPA	**OTM**	OTP
	OTMA	**OTP**	OTM

- In particular, when the parameter DI is set to DI1, the relation between the hardware over travel and the detected limit is unique. The unique relation between the counting direction of the position scale and the travel limit switch is shown in the figure below.
  - ◊ When the parameter DI is set to DI1, the Motor rotating in the plus direction enters the off-limits area from the limit sensor OTM.
    (This is because the plus direction of the Motor position scale is CCW.)
    In this case, the output OTPA opens as the Motor enters in the off-limits area from the plus side.

Fig 7-9: Over travel limit detraction when the parameter DI is set to DI1

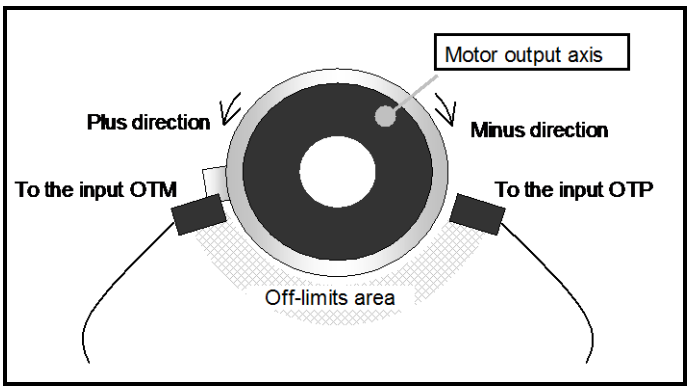

Fig 7-10: Signal timing of the input OTP and the output OTPA (negative logic)

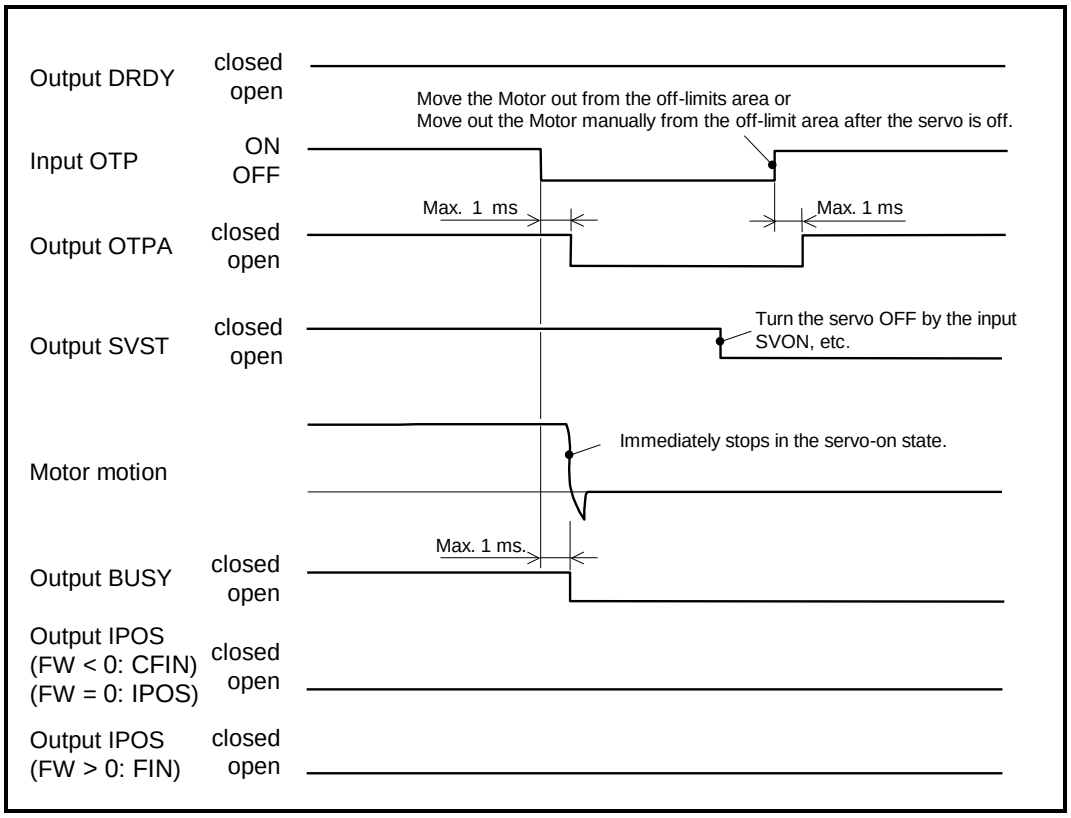

- When the over travel limit is detected in the middle of Motor rotation, the Motor stops before completing the positioning, thus the output IPOS (In-position) will not be closed.

- When the over travel limit is detected during the Motor is stopping, the output IPOS remains unchanged because the Motor is holding the position at where the positioning operation completed right before the detection of the over travel limit.

7.2.4. Servo State: SVST

- This signal reports that the Motor servo is active.

Table 7-19: Signal logic of the output SVST

Logic	Description
Open	Servo-off
Closed	Servo on

- This signal can be used to check if the Motor servo is activated by the input SVON (Servo on).
- When the Motor servo is activated, a positioning operation is executable by an instructed positioning operation command or a pulse train input.
- For a strict check if a positioning operation is possible, confirm that all of the following conditions are met including the output SVST.
  - ◊ Output SVST: closed (The servo is on.)
  - ◊ Output WRN: closed (No warning is occurring.)
  - ◊ Input STP: OFF (A positioning is operable.)
- Refer to "7.1.4. Servo on: SVON" for the signal timing of the output SVST.

7.2.5. In-operation: BUSY

- This signal reports that the System is in the middle of the operation executed by an internal command.

Table 7-20: Signal logic of the output BUSY

Logic	Description
Open	Idle
Closed	In-operation

- Besides the program operations, another program operation to change parameter settings by the program, which does not involve a motion of the Motor, is available to the Driver Unit Model EDD. Because of this, the Driver Unit Model EDD requires the function of output BUSY.

- In-operation denotes that the System is executing one of the following positioning operations, except the pulse train command operation.
  1) Program operation
  2) Positioning command: From the start to end of the first execution of a positioning.
  3) Jogging
  4) Command AT: Auto tuning
  5) Home Return operation

- If the master controller cannot detect the closing time length of the output BUSY due to the operating time is too short, the parameter BW (BUSY width) can be set to fix the minimum outputting time of the BUSY signal.
  The parameter BW value controls closing time of the output BUSY even operating time is short.
  - ◊ The System accepts an input of the next positioning command in the time set by the parameter BW after completion of the operation.

Table 7-21: Parameters related to the output BUSY

Name	Function	Initial setting	Data range	Unit
BW	Sets the closing time of the output BUSY.	0.0	0.0 to 10 000.0	ms

- Refer to “7.2.6. In-position: IPOS” for the signal timing of the output BUSY.

7.2.6. In-position: IPOS

- This signal reports completion (settling) of a positioning operation executed by a positioning command. The settling means that the Motor has stopped at the target position with a margin of error.

Table 7-22: Signal logic of the output IPOS

Logic	Description
Open	Positioning uncompleted, or lost data of the target position.
Closed	Positioning completed and the target position data secured.

- When execution of positioning is not performed after turning on the power or when a positioning operation is interrupted, the output IPOS does not close because the current position is not at the target position.

- The output IPOS does not close in the following conditions because the target position data is not secured. In such a case, execute the positioning command again and complete it to make the output IPOS closed.
  - ◊ The positioning is interrupted by the input STP to stop the Motor.
  - ◊ Turning the Motor servo off.
  - ◊ The Motor stopped due to an alarm, warning and a detection of the travel limit.

- There are three reporting mode set by the parameter FW (FIN with).
  - ◊ CFIN mode: Holds the completion signal after completion of positioning.
  - ◊ IPOS mode: After completion of positioning, the way of outputting IPOS signal depends on the position error.
  - ◊ FIN mode: The System outputs a pulse signal at the completion of a positioning.

Fig 7-11: Difference in modes to output IPOS signal.

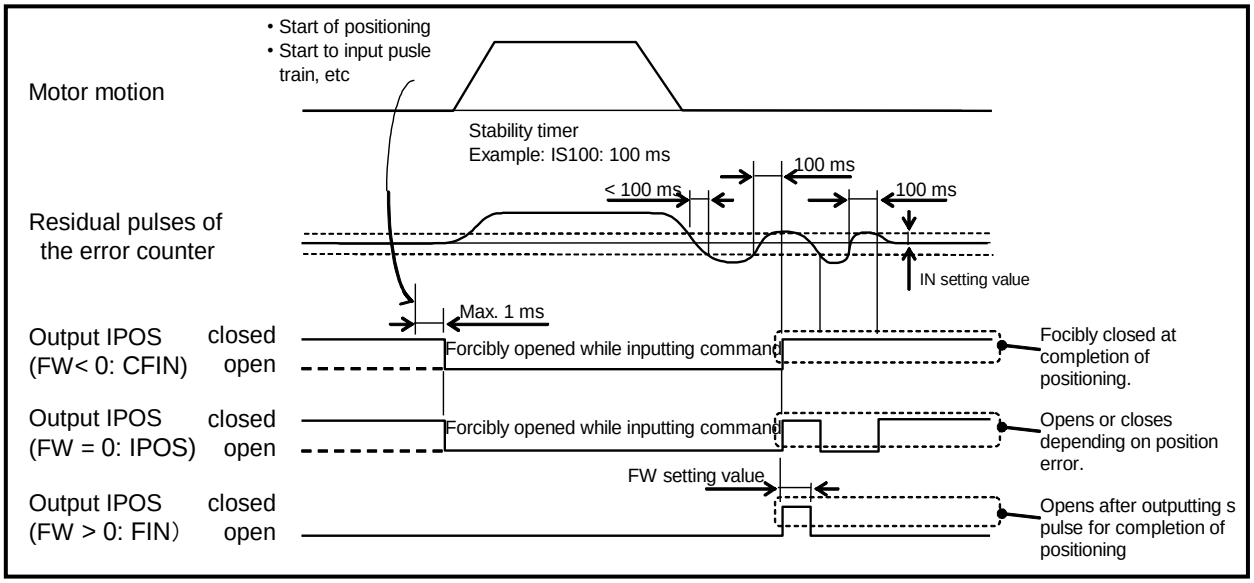

Table 7-23: Parameter related to the output IPOS

Name	Function	Initial setting	Data range	Unit
IN	In-position limit: Threshold of outputting IPOS signal	400	0~2 621 439	pulse
IS	In-position stability timer	0.0	0.0~10 000.0	ms
FW	FIN width: Sets the IPOS outputting mode	-1.0	– 0.1 to – 0 000.0: CFIN mode 0.0: IPOS mode 0.1 to 10 000.0: FIN mode	ms - ms

7.2.6.1. CFIN Mode: Parameter FW < 0

- This mode is to report completion of positioning operation.
- Execution of positioning command, such as program positioning operation, edits the commanded position. Thus, the output IPOS (In-position) will be forcibly opened.
  - ◊ For every input of starting command, the output IPOS is ensured to be opened longer than the value of the parameter FW.
    It also opens for at least the time set in the parameter IS (In-position stability timer) to check the stability of positioning.
- The System confirms the settling condition when the Motor reaches to the target position. It closes the output IPOS when residual pulses in the error counter is less or equal to the set value of the parameter IN (In-position limit), and maintains this state.

Fig 7-12: Output IPOS in the operation caused by an internal command (CFIN mode)

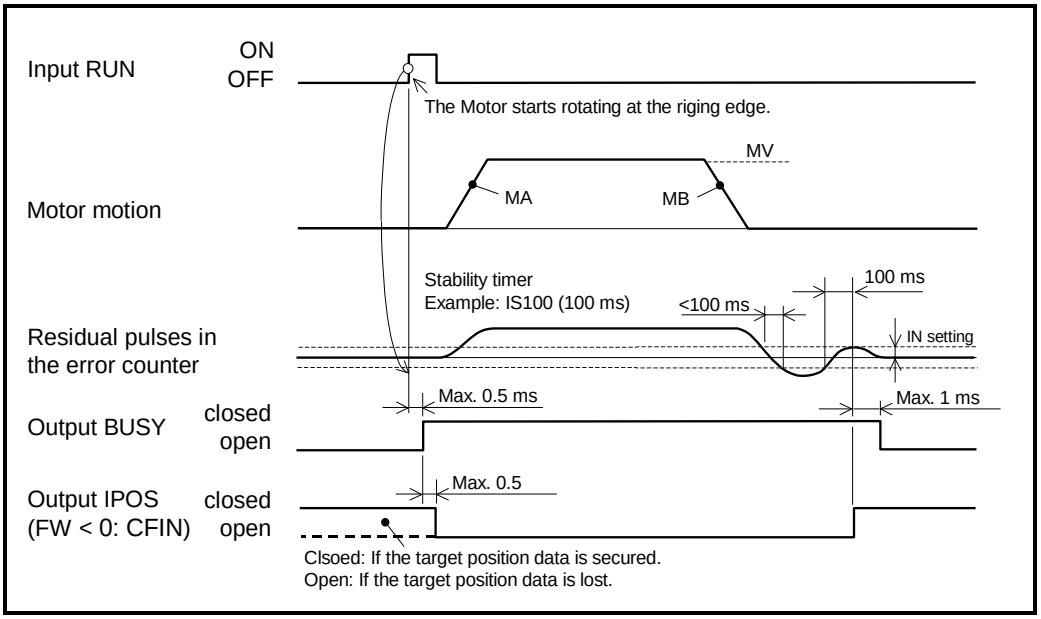

- The System always confirms completion of positioning every time the inputting pulses pause in the pulse train command operation. If the inputting pulses are intermittent, set the parameter IS longer. Otherwise the output IPOS signal will be unstable.

Fig 7-13: Output IPOS in the pulse train command operation (CFIN mode)

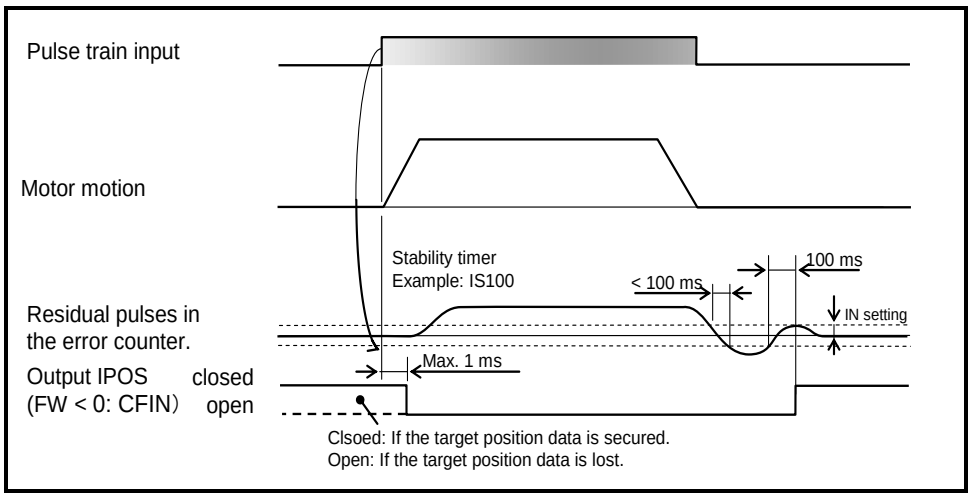

- The parameter FW sets the minimum holding time to keep the output IPOS open for the confirmation even for a very short operating time. (The unit is 1 millisecond. When the parameter is set to FW10, the time is 10 ms.)

7.2.6.2. IPOS Mode (Parameter FW = 0)

- This mode is to check if the current position defers from the target position of the positioning command.
- Execution of positioning command, such as program operation, edits the target position. Thus, the output IPOS (In-position) will be forcibly opened.
  - ◊ The output opens at least for the time set in the parameter IS (In-position stability timer) to check stability of positioning, even no internal pulse is outputted.
- Confirmation of settling stability starts when the Motor reaches to the target position. The IPOS output closes only when residual pulses in the error counter is less or equal to the setting of parameter IN; it opens in other states.

Fig 7-14: Output IPOS in the operation caused by an internal command (IPOS mode)

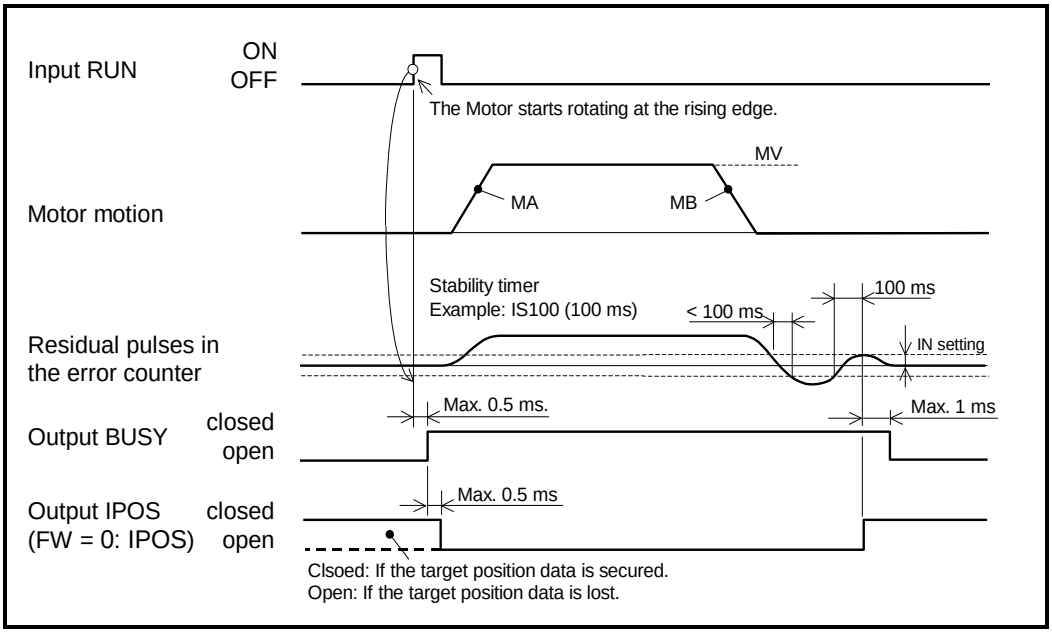

- In the pulse train command operation, the System always confirms completion of positioning every time inputting pulse pauses. If the intervals of inputting pulses are intermittent, set the parameter IS longer because the outputting IPOS signal will be unstable.

Fig 7-15: Output IPOS in the pulse train command operation (IPOS mode)

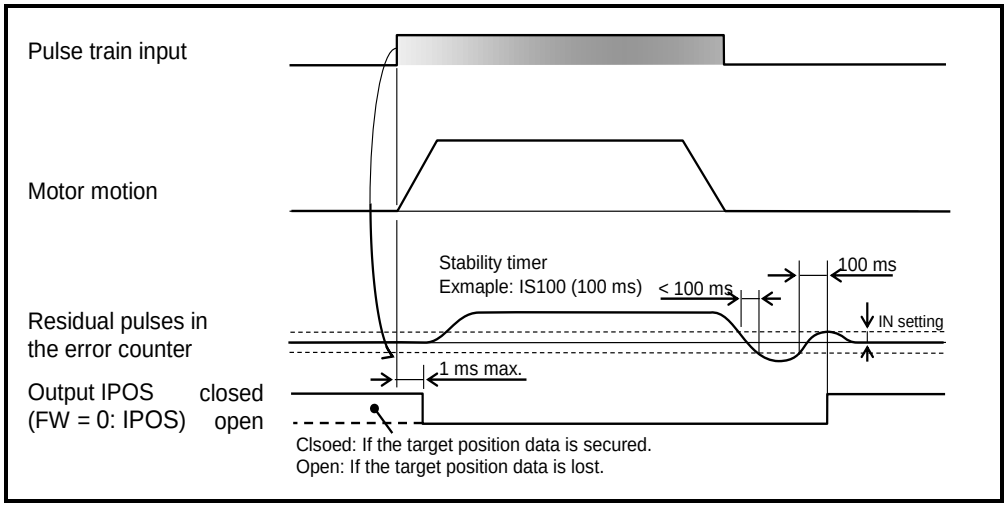

7.2.6.3. FIN Mode (Parameter FW > 0)

- The output IPOS reports completion of the operation caused by the positioning command.
- The IPOS signal shall be outputted for every positioning start command such as the RUN command (Program start).
  - ◊ The output is closed at least for the time set in the parameter FW (In-position stability timer) to check stability of positioning; even no internal pulse is outputted.
- The System confirms the settling condition when the Motor reaches to the target position. It closes the output IPOS for a time set in the parameter FW when residual pulses in the error counter is less or equal to the set value of the parameter IN (In-position limit).
  - ◊ When the next positioning command is outputted while the output IPOS is closed, the output IPOS opens and the positioning starts.

Fig 7-16: Output IPOS in a positioning under the internal positioning command (FIN mode)

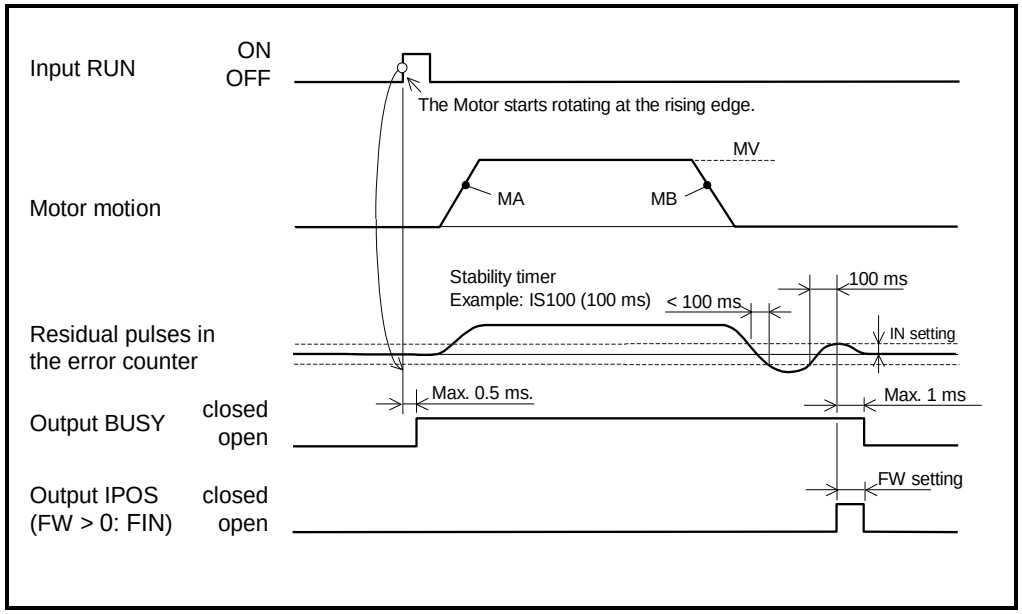

- The System always confirms completion of positioning every time inputting pulse pauses in the pulse train command operation. If the intervals of inputting pulses are intermittent, set the parameter IS longer because the outputting IPOS signal will be unstable.

Fig 7-17: Output IPOS in the pulse train command operation (FIN mode)

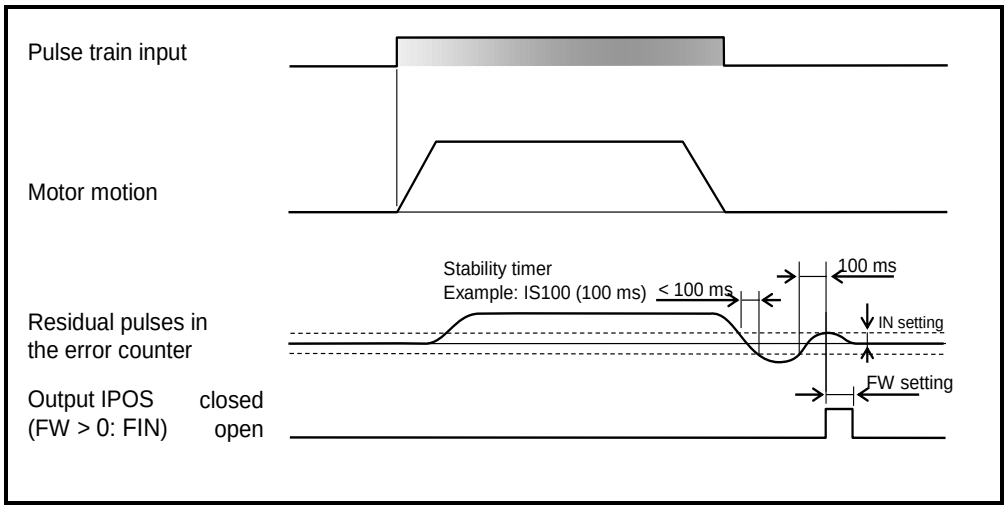

7.2.6.4. In-position Limit: Parameter IN

- This parameter states positioning accuracy.
- The output IPOS closes when the absolute values in the error counter is less or equal to the setting value of the parameter IN.
- The unit is the resolution of the position sensor (pulse).

Table 7-24: Resolution of position sensor

Motor type	Resolution (count/revolution)
PS	2 621 440

◊ For example, the following formula shows how to convert the repeatability of ± 100 seconds, which is to be specified for a Motor, to the unit of pulse.

$$\text{IN setting} = \frac{\text{Resolution}}{360} \times \frac{\text{Repeatability}}{[\text{degree}]}$$

$$= \frac{2\,621\,440}{360} \times \frac{100}{3600} = 202\ [\text{pulse}]$$

7.2.6.5. Parameter IS: In-position Stability Timer

- This is to check the stability of positioning operation.
- In case of the IPOS mode, the output IPOS signal might become unstable at settling stage of a positioning if the parameter IN is set to low value (approximately IN100 or lower) even the servo gain is well tuned.
  - ◊ Setting the parameter IS is to prevent the problem.
- In case of both CFIN mode and FIN mode, the setting of parameter IS prevents outputting IPOS signal before the Motor settles in the position.

7.2.7. Target Proximity: NEARA and NEARB

- These outputs report that the Motor is approaching to the target position.
- These outputs are used to have a precise timing with external devices just before the positioning completes.

Table 7-25: Signal logic of outputs NEAR and NEARB

Logic	Description
Open	Not in the proximity of the target position.
Closed	In the proximity of the target position.

- These outputs report the current Motor position is approaching to the target position when executing a positioning by the programs or by RS-232C communication.
- The output closes when the Motor gets in the proximity of the target position set by the parameter NA (Near A) in units of pulse.
- The output remains closed when the Motor is in the proximity area at the time of inputting a positioning command.

Table 7-26: Parameter related to outputs NEARA and NEARB

Name (code)	Function	Initial setting	Data range	Unit
NA	Proximity limit A	0	0 to 262 144 000	pulse
NB	Proximity limit B			

- When the output is closed once the Motor has been in proximity area, the output remains closed until the next positioning command is executed. (The Condition of output signal is ensured to be stable until the next positioning operation is completed.)
  However, it opens again in the following situations since the Driver Unit cannot hold the current target position.
  - ◊ Interruption of a positioning by the input STP (Stop).
  - ◊ Deactivation of Motor servo
  - ◊ Interruption of a positioning by an alarm, a warning and an activation of the travel limit.

Fig 7-18: Signal timing of outputs NEARA and NEARB

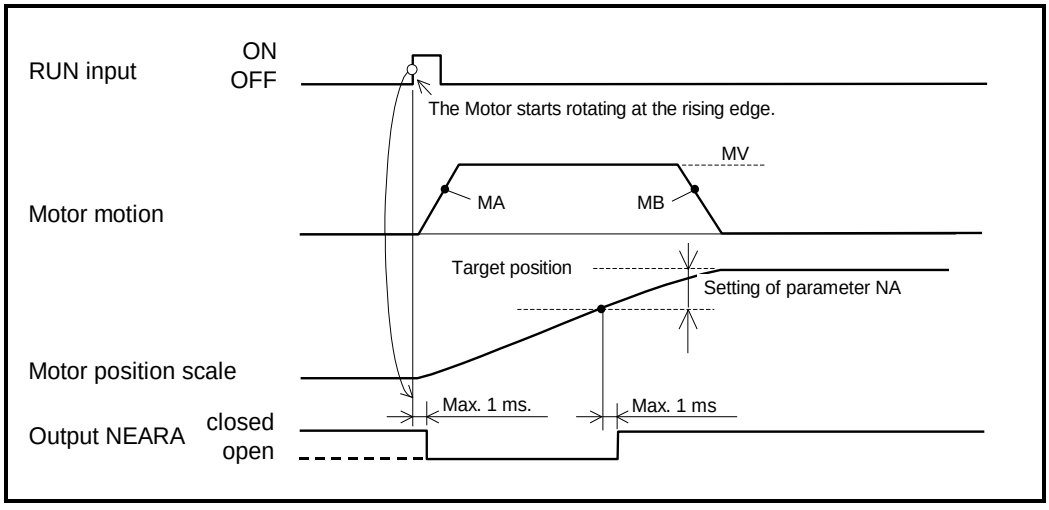

7.2.8. Position Feedback Signal

- The position feedback signal monitors the rotational amount of the Motor in øA/øB format and the Motor reference position by the øZ pulse.
- The signal can be used for controlling the position scale in the master controller.
- The total edge count number of øA and øB pulses for a one revolution of the Motor can be freely divided by the parameter FR (Feedback signal resolution).
  The number of the øZ pulses for one revolution of the Motor is 80 pulses.
  - ◊ The parameter FZ (Feedback phase Z configuration) specifies the signal configuration of phase Z.

Fig 7-19: Position feedback signal

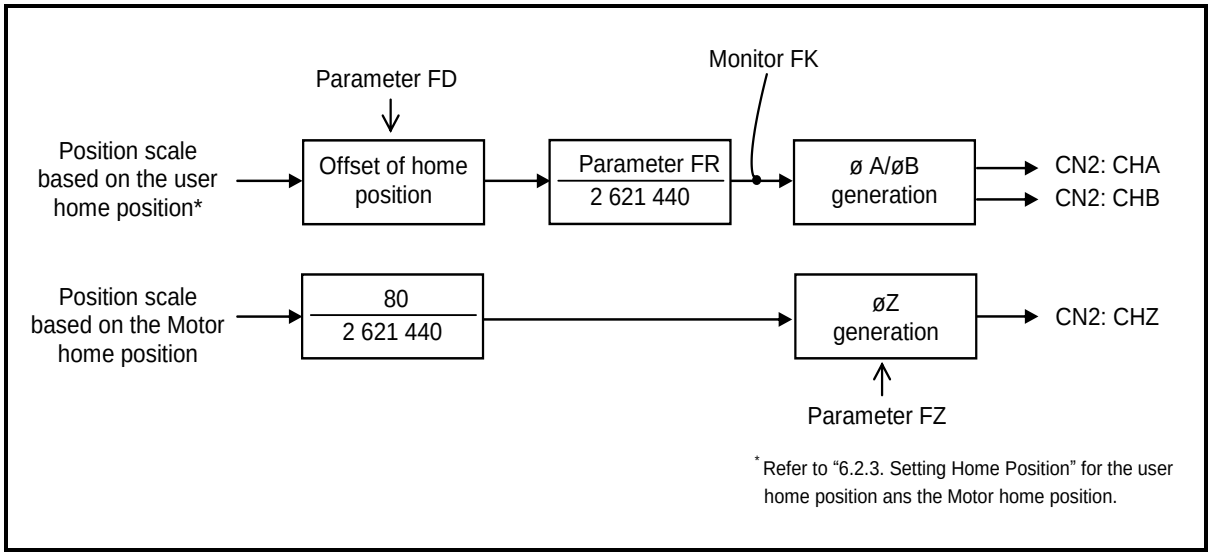

Table 7-27: Input/Output and parameters related to the position feedback signal.

Category	Name (code)	Function	Initial setting	Range/Description	Unit
Control output	CHA	Position feedback signal øA	–	• The pulse signal that indicates number of Motor rotation. • The signal format is the line driver format. . • Number of outputting pulses of øA and øB in one revolution can be freely divided.	
	∗CHA	Position feedback signal ø∗A	–		
	CHB	Position feedback signal øB	–		
	∗CHB	Position feedback signal ø∗B	–		
	CHZ	Position feedback signal øZ	–		
	∗CHZ	Position feedback signal ø∗Z	–		
Parameter	★FD	Specifies the leading phase of feedback signal.	0	0: The leading phase is øA in the CW. 1: The leading phase is øB in the CW.	–
	★FZ	Specifies configuration of øZ.	0	0: øZ configuration 1: MSB configuration	–
	★FR	Feedback signal resolution	81 920	0: Prohibit to output øA/øB. 1 to 5 242 880	count/rev.
	VL*	Pulse generating speed limiter.	10.000	0.001 to 10.000	s^{-1}
Monitor	FK	Reads out the total edge count number of øA and øB.	0	-2 147 483 648 to 2 147 483 647	count

★: Requires the password.
*: Automatically set by the parameter FR.

7.2.8.1. Resolution of Position Feedback Signal

Table 7-28: Resolution of position feedback signal

Category	øA and øB (count/revolution)	øZ (count/revolution)
Shipping set	• 81 920 (after quadrupled) • (20 480 each for øA and øB)	80
Range	• 1 to 5 242 880 (after quadrupled) (1 to 1 310 720 each for øA and øB)	80
Restrictions	• The frequency of quadrupled position feedback signal is 3 125 000 [count/revolution] (The maximum output frequency of øA and øB is 781 kHz.) • For example, the maximum rotational speed of the Motor for the resolution of 5 242 880 [count/revolution] must be less or equal to the following. • Maximum rotational speed: = 781 000/1 310 720 = 0.6 [s^{-1}]] •(There is another restriction on the specified maximum speed of each Motor type.)	–

* Actually, in addition to above restrictions, there is maximum speed of each Motor type.

- Specify the total number of edge count of øA and øB pulse for one Motor revolution by the parameter FR (Feedback signal resolution). The signal phase relation between øA and øB can be specified by the parameter FD (Feedback signal leading phase)
  The Driver Unit will process internal residual pulses caused by the setting of free circular resolution. (The basic position for the computation of free resolution setting is the home position.)

  ◊ For an example, let's set the Motor resolution to 360 000 edge count for one revolution. (Phase A and B outputs 90 000 [count/revolution] respectively.)

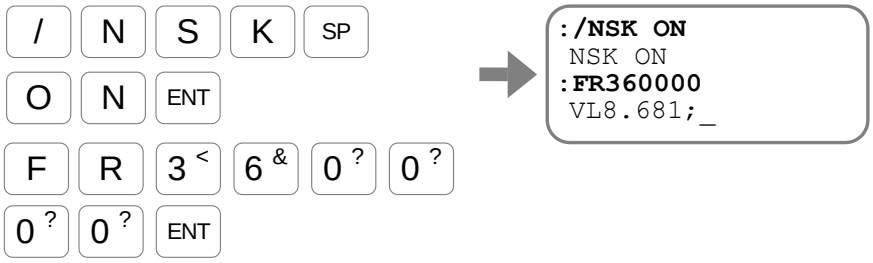

- A setting of resolution will automatically specify the parameter VL (Velocity limiter). This is because the maximum edge outputting frequency of the feedback signal is limited to 3 125 000 [count/rev.] maximum. (Both for øA and øB is 781 [kHz] each.)
    - ◊ The parameter VL is automatically set not to exceed above limits, and thus the maximum speed of a positioning operation is also limited not to exceed the VL setting.
    - ◊ In case of a pulse train command positioning, be sure to control the inputting pulse frequency not to rotate the Motor faster than the VL value.
    - ◊ The allowable speed of each Motor type is another restriction besides the parameter VL.
        - Please refer to "2.5 Motor Specifications."

Fig 7-20: Resolution of position feedback signal and speed limit

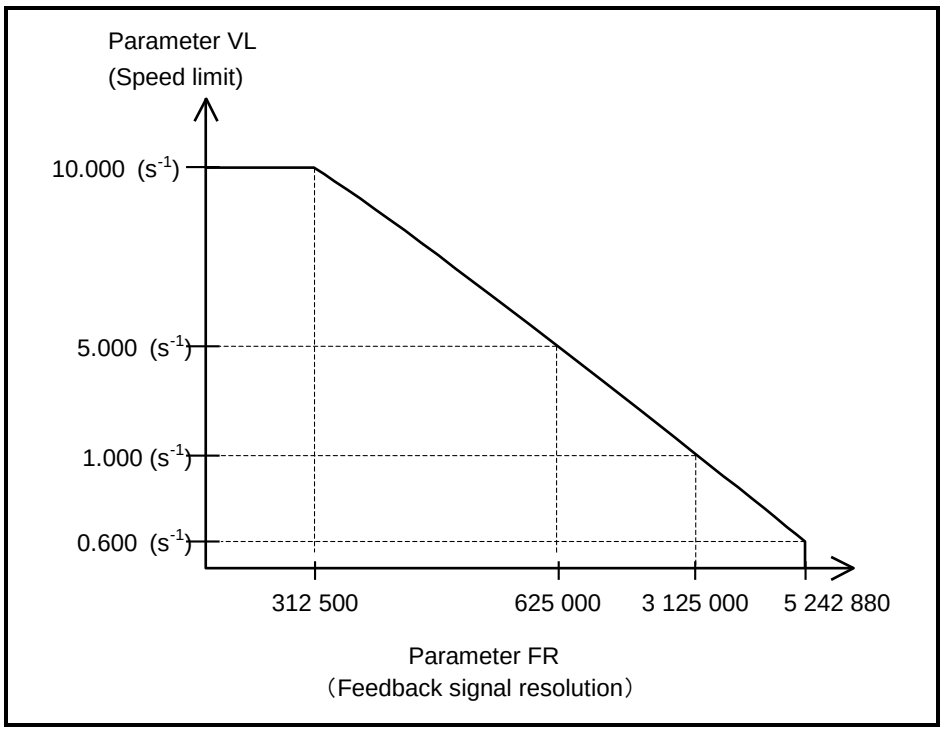

7.2.8.2. Signal Output Timing

Fig 7-21: Signal timing of position feedback signal (øA/øB)

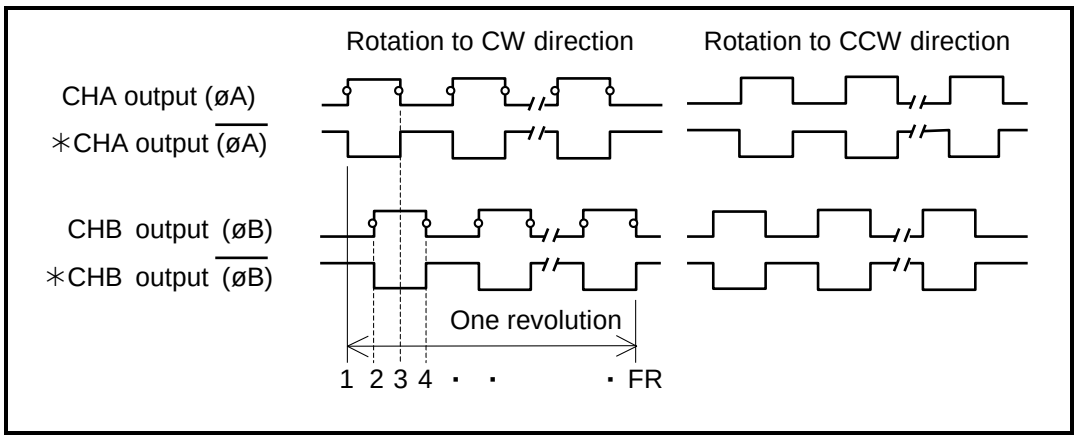

Fig 7-22: Signal timing of position feedback signal (øZ)

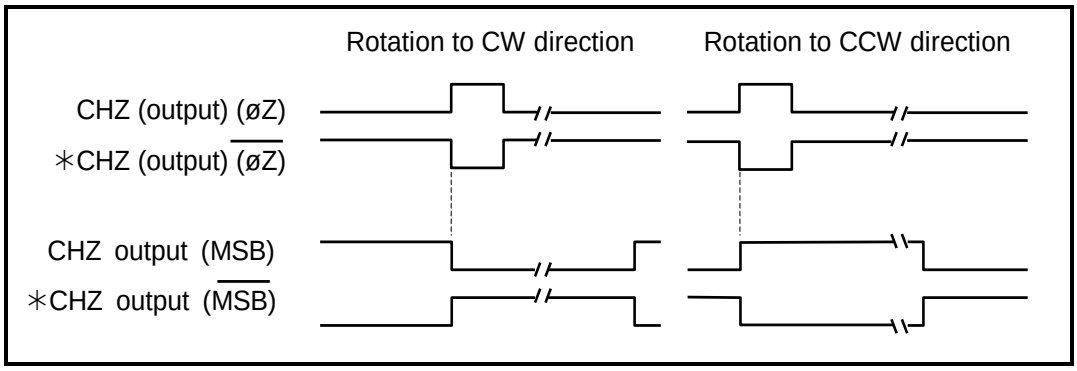

⚠ *Caution : If the phase Z is used to specify the position scale of the Motor, be sure to use the rising edge of the signal.*

- The phase Z is made to have precise position repeatability on its rising edge regardless of the Motor rotational direction.
- Use of the falling edge of the signal to detect the base position won't maintain the position repeatability because of the effect caused by difference in pulse width when reversing the rotational direction.

⚠ *Caution : The output signals of the phases A, B and Z are not synchronized each other.*

7.3. RS-232C/USB Monitor

- Various types of monitors are available via RS-232C or USB communication.

Table 7-29: RS-232C monitors

Name (code)	Function	Data range*	Unit
IO0 to IO3	Monitors the state of control inputs and outputs of the CN2 connector.	Reads out condition of the CN2 signal ports. (ON and OFF, or open and closed)	–
F**	Monitors the state of inputs and outputs of the CN2 connector by function group.	0: Inactive (not instructed) 1: Active (instructed)	–
TS0 to TS13	Reads out setting value.	Reads out the parameters by a function group.	–
TA	Identifies current alarm.	Reports alarms currently detected.	–
* TA/HI	Reads out the alarm history.	Reads out recent 32 alarms that have been reported.	–
?TA	Reads out currently occurring alarms at once.	Reads out all alarms currently reported.	–
RP	Monitors the number of inputted pulses.	– 2 147 483 648 to 2 147 483 647	count
FK	Reads out the number of position feedback signals.	– 2 147 483 648 to 2 147 483 647	count
TRC	Reads out transient position command	0.000 to ± 10.000	s^{-1}
TV	Reads out current velocity	0.00 to ± 0.000	
TE	Reads out position error.	0 to ± 2 621 439	pulse
TXT	Reports a positioning time.	0.0 to 214 641 044.2	ms
TST	Reports a settling time.	0.0 to 214 641 044.2	
TP	Monitors current position in units of pulse.	0 to 2 621 439	pulse
TPC	Reports commanded position in units of pulse.	0 to 2 621 439	
TD	Monitors current position in units of 0.01 angle degree.	0 to 35 999	0.01°
TDC	Reports commanded position in units of 0.01 angle degree.	0 to 35 999	
TQ	Monitor current position in user units.	0 to QR-1	360°/Parameter QR
TQC	Reports commanded position in user units.	0 to QR-1	
TN	Monitors current position in units of circular resolution.	0 to CR-1	360°/Parameter QR
TNC	Monitors commanded position in units of circular resolution.	0 to CR-1	
TG	Reports the gain switching condition.	0: Using the gain for gain switching. (Parameter PGL and VGL) 1: Using the usual gain. (Parameter PG and VG)	–
TT	Reads out the torque command.	0.00 to ±100.00	%
TJ	Monitor the thermal loading.	0.00 to 100.00 Warning A3 (software thermal) arises when the value is greater or equal to 100%.	%

*USB communication allows as many as 10 alarms to be read out.

7.3.1. Monitoring Way for Control Input/Output Signal

- The monitor IO (Input/Output monitor) monitors the condition of inputs and outputs of the connector CN2.
- The monitor can be used for a wiring check.
- The relation between the monitor IO and the function of input and output of the Driver Unit is illustrated in Fig 7-23 below. The IO0 to IO3 can monitor each part of inputs and outputs.
- Another way to check availability of each function is to input **F**+**Control I/O function**.

Fig 7-23: Input/Output function and their condition monitor

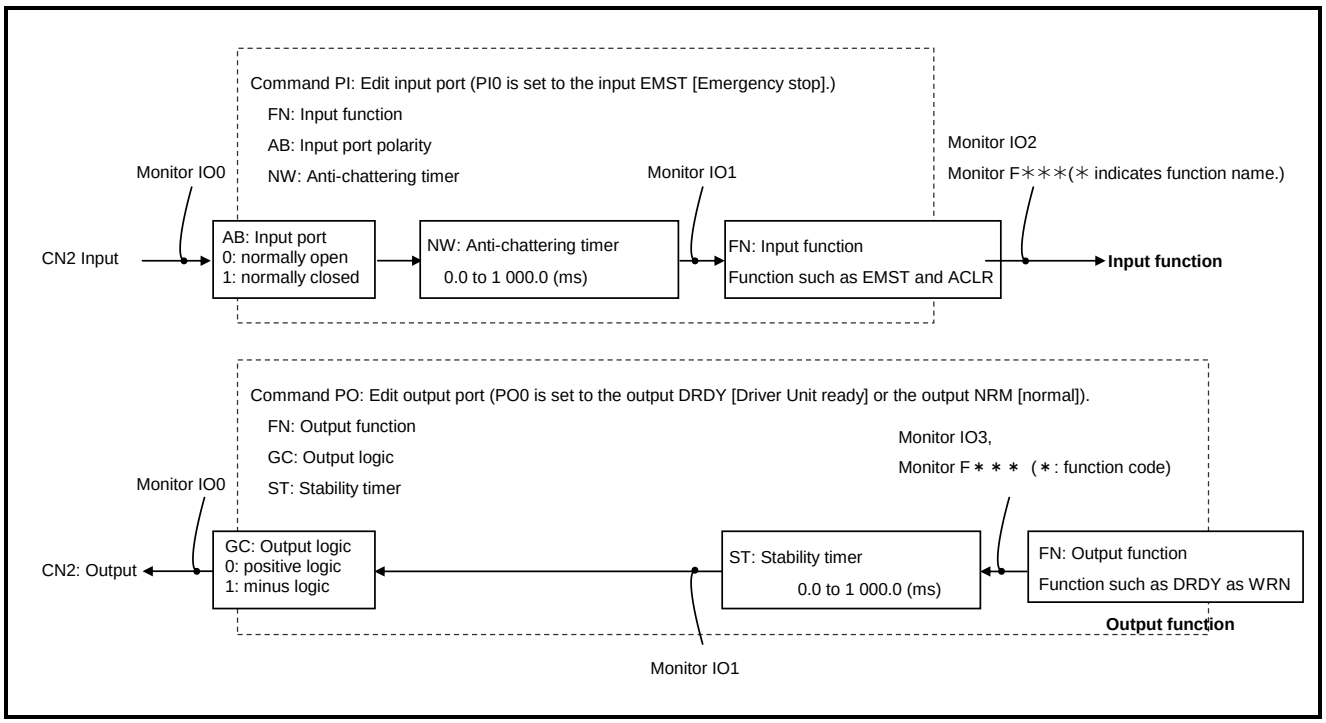

7.3.1.1. Electrical Condition Monitor: Monitor IO0

- Monitors electrical condition of the input and output port.

  ◊ Input IO0/RP.

  Press the [BS] key to abort repeating readout.

Fig 7-24: Example of the monitor IC0

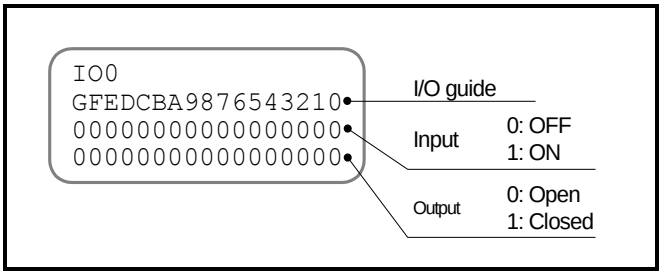

Table 7-30: Monitoring contents of the monitors IO0 and IO1

Gide	G	F	E	D	C	B	A	9	8	7	6	5	4	3	2	1	0
CN2 pin number	20	19	18	17	16	15	14	13	12	11	9	8	7	6	5	4	3
Pin code (Shipping set)	**PI16 (DIR)**	**PI15 (JOG)**	**PI14 (PRG7)**	**PI13 (PRG6)**	**PI12 (PRG5)**	**PI11 (PRG4)**	**PI10 (PRG3)**	**PI09 (PRG2)**	**PI08 (PRG1)**	**PI07 (PRG0)**	**PI06 (STP)**	**PI05 (RUN)**	**PI04 (SVON)**	**PI03 (OTM)**	**PI02 (OTP)**	**PI01 (ACLR)**	**PI00 (EMST)**
CN2 pin number	–	–	–	–	–	–	–	–	–	35	34	33	32	31	30	29	28
Pin code (Shipping set)	Reserved	Reserved	Reserved	Reserved	Reserved	Reserved	Reserved	Reserved	Reserved	**PO07 (NEARA)**	**PO06 (IPOS)**	**PO05 (BUSY)**	**PO04 (SVST)**	**PO03 (OTMA)**	**PO02 (OTPA)**	**PO01 (WRN)**	**PO00 (DRDY)**

7.3.1.2. Monitor for Internal Recognition of Input and Output State: Monitor IO1

- Monitors the applied state of following function to the control inputs and outputs:
  - ◊ For the inputs, the monitor reports how the Driver Unit recognizes the application state of functions.
    (The readout is the applied state of parameters AB [Input polarity] and NW [Anti-chattering timer] in the command PI [Edit input port])
  - ◊ For the outputs, the monitor reports the state just before the application of output logic.
    (The readout is the applied state of parameters ST [Stability timer]in the command PO [Edit control output]. The parameter GC [Output logic] is not applied.)

Fig 7-25: Example of Monitor IO1

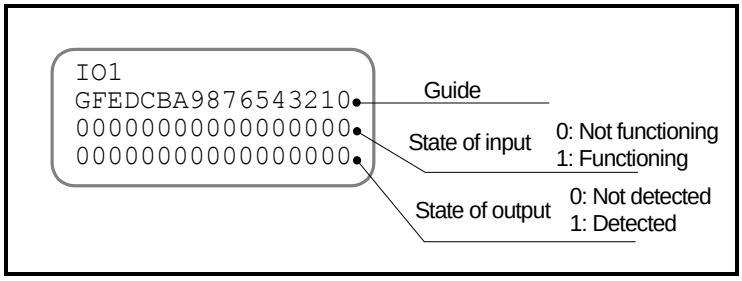

7.3.1.3. Monitor for State of Input Functions: Monitor IO2

- Monitors the application state of input functions in a line.
  The readout is the recognition of the Driver Unit.
  - ◊ The readout is the application state of the parameters AB (Input polarity) and NW (Anti-chattering timer) in the command PI (Edit control input).
- The code 1 denotes that the function is available and the code 2 denotes that the function is not available.

Table 7-31: Readout of Monitor IO2

Guide	F	E	D	C	B	A	9	8	7	6	5	4	3	2	1	0
Function code	**JOG**	**PRG7**	**PRG6**	**PRG5**	**PRG4**	**PRG3**	**PRG2**	**PRG1**	**PRG0**	**STP**	**RUN**	**SVON**	**OTM**	**OTP**	**ACLR**	**EMST**
	Reserved	Reserved	Reserved	Reserved	Reserved	Reserved	Reserved	Reserved	Reserved	Reserved	**HLS**	**HOS**	**IOFF**	**ORD**	**HLD**	**DIR**

7.3.1.4. Monitor for State of Output Functions: Monitor IO3

- Monitors the application state of output functions in a line.
  The readout is for the state just before the application of the output logic.
  - ◊ The monitor is not applicable for the parameters ST (Stability timer) and GC (Output logic) in the command PO (Edit control input).
- The code 1 indicates that the output will be detected and the code 0 indicates that the output will not be detected.

Table 7-32: Readout pf Monitor IO3

Guide	F	E	D	C	B	A	9	8	7	6	5	4	3	2	1	0
Function code	**TVEU**	**TVO**	**TVU**	**TEO**	**TEU**	**ZONEB**	**ZONEA**	**NEARB**	**NEARA**	**IPOS**	**BUSY**	**SVST**	**OTMA**	**OTPA**	**WRN**	**DRDY**
	Reserved	Reserved	Reserved	Reserved	Reserved	Reserved	**ZONEC**	**HCMP**	**HOME**	**NRM**	**OTXA**	**TJO**	**TJU**	**TTO**	**TTU**	**TVEO**

7.3.1.5. Monitor for Individual Function

- An input of **F** + **Function name (code) of input or output** is available to monitor the application state of a specified function.
  - ◊ For the inputs, the monitor reports how the Driver Unit recognizes the application state of the specified function.
  - ◊ For the outputs, the monitor reports the state just before application of the stability timer and the output logic.
    That is, the readout is the state before filtering (stability timer) the output condition.
- For an example, Fig 7-26 below illustrates a monitoring example of the state of input SVON (Servo on). The example indicates the code 1 showing the input SVON is effective even if at all the input SVON is a normally closed contact.

Fig 7-26: Example of function monitor

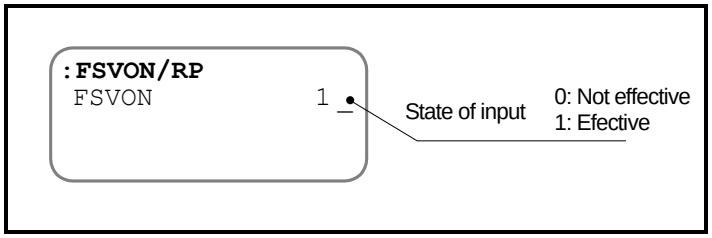

7.3.2. Alarm Monitor

- Identifies the alarm and the warning currently occurring.
  - ◊ Refer to "11. Alarm and Warning" for details.

1) Activates the input TA (Tell alarm status).

T A ENT

```
:TA
 F3>Hardware Over
Travel;_
```

The monitor identifies the alarm and the warning currently occurring.
No indication on the screen if no alarm is reported.

2) Every input of SP key identifies an alarm on the next line. Scroll all alarms by the SP key or pause reading out by the BS key.

SP SP ···

```
:TA
 F3>Hardware Over
Travel;
 F4>Emergency Stop;
```

∗ The order of readout is not corresponding to the order of alarm occurrence.

7.3.2.1. Monitor All Occurring Alarms at One Time

- You can monitor all occurring alarms at a time.
  - ◊ Input "?TA" or "TA/RP."
    Input the BS key to abort repetitive readout.

Fig 7-27: Monitor example of the alarm status

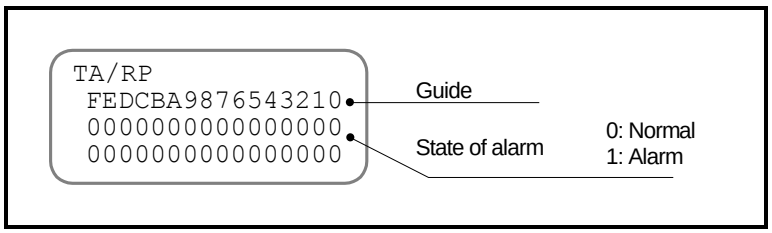

Table 7-33: Monitor by TA/RP

Guide	F	E	D	C	B	A	9	8	7	6	5	4	3	2	1	0
Alarm cord	F3 (-)	F3 (+)	F2 (-)	F2 (+)	F8	F5	P5	C5	C0	A4	A3	F1	P9	P3	P2	P1
	P0	A9	A7	A2	A1	A0	C4	C3	A5	F4	E9	E8	E7	E2		E0

7.3.2.2. Monitor for Alarm History and Event: Monitor TA/HI

- The monitor that reports the history of alarms and warnings that have occurred and the history of events. The history record holds thirty-two recent instances.

⚠ *Caution : With USB communication, up to 10 history records can be displayed.*

◊ Input "TA/HI."
Scroll all alarms by the [SP] key or pause reading out by the [BS] key.

Fig 7-28: Monitor example (TA/HI)

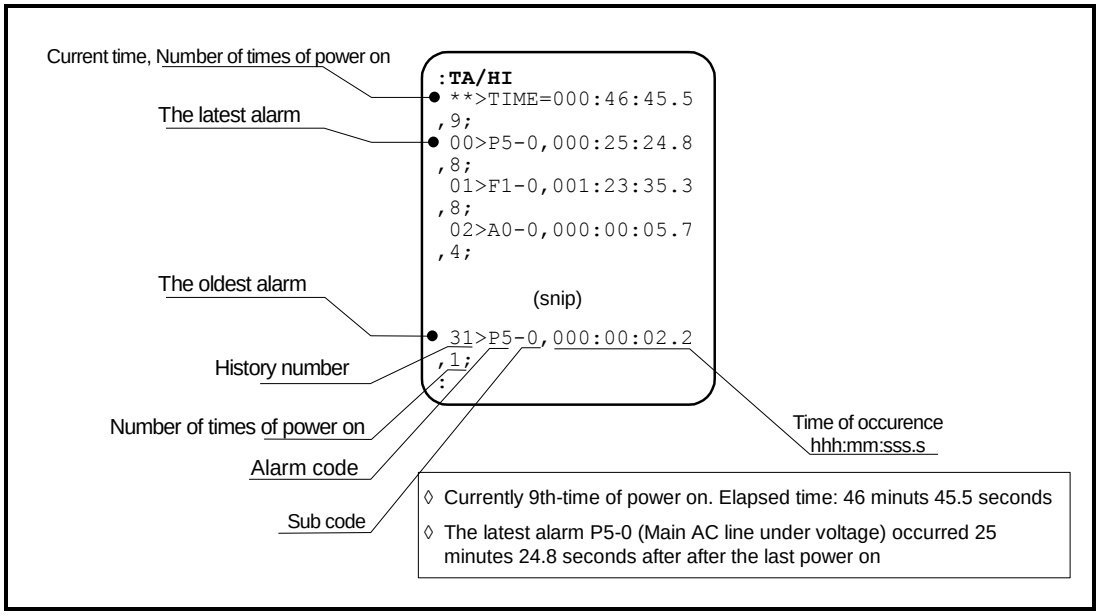

- The Driver Unit controls the number of times of power on and the elapsed time from a time of control power-on. When an alarm, a warning or an event occurs, it stores the contents of occurrence with the information.

  ◊ The Driver Unit can judge the event as "it happened right after the power is turned on" or "it continually occurred" through the record of the time of occurrence.

- The meaning of event code is described in the table 7-34 below. Events not fall under the description are treated as an alarm or a warning. Refer to "11. Alarm and Warning."

Table 7-34: Contents of monitor TA/HI

Event code	Description
N0-0	The home position is reset by the command AZ or the Home Return operation

- The table 7-35 below lists the alarms and warnings that are not on the alarm history record.

Table 7-35: Alarms and warnings that are not on the Alarm history

7 segments LED	Command TA (Tell alarm status)	Description	Motor condition
C3	**C3>CPU Error***	Error on the CPU	Servo on
E0	**E0>RAM Error**	Error on the RAM.	
E2	**E2>ROM Error***	Error on the ROM	
F2	**F2>Software Over Travel**	Software over travel limit is on.	Servo lock
F3	**F3>Hardware Over Travel**	Hardware over travel limit is on.	
F4	**F4>Emergency Stop**	Emergency stop	Servo off
P3	**P3>Control AC Line Under Voltage**	Low voltage of the control power supply voltage.	

*: The alarm may be on the record depending on the details of situation.

7.3.3. Pulse Train Counter: Monitor RP

- The counter monitors the number of inputted pulses.
- This is used to check the number of inputted pulses of pulse train command.
- Different from other monitors, you can reset the monitor RP (Inputted pulse train monitor). That is, you can monitor the inputted number of pulses starting from when the monitor is reset to 0 (zero).

Fig 7-29: Example of Monitor RP/RP

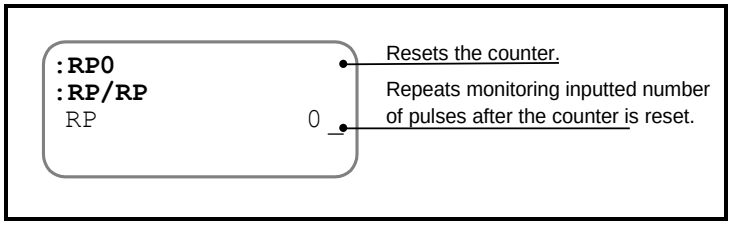

7.3.4. Position Feedback Signal Counter: Monitor FK

- The counter monitors the total number of the rising edges of øA and øB position feedback pulse.
- This is used to check the number of outputted position feedback signal pulses from the Driver Unit.
- Different from other monitors, you can rest the monitor FK (Position feedback signal counter). That is, you can monitor the total number of signal rising edges starting after when the counter is reset to 0 (zero).

Fig 7-30: Monitoring example (FK/RP)

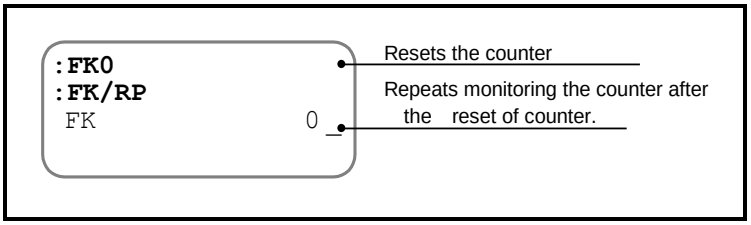

7.3.5. Current Position Monitor: Monitor TP

- This monitor reports the current position.
- This is used to check the Motor stopping position and the setting position via teaching.
- The following example describes monitoring the current position in units of pulse. (You can monitor the position in other units. Refer to Table 7-29: RS-232C monitors."

Fig 7-31: Monitor example (TP/RP)

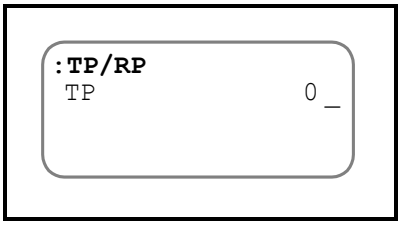

7.3.6. Monitor for Software Thermal Loading: Monitor TJ

- The Driver Unit is always computing the heat generation and radiation of the Motor using the current flowing, to estimate the temperature rise of the Motor.

- The warning A3 (Software thermal loading) occurs when a rise of the Motor temperature, which is resulted from the calculation, exceeds the threshold.

Fig 7-32: Example of the monitor (TJ/RP)

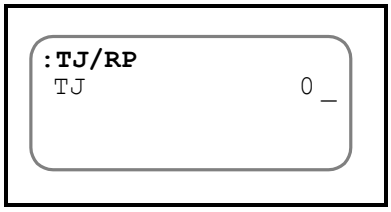

- The readout value of the monitor TJ (Thermal loading) is between 0.00 to 100%. If the monitored TJ value is not zero (TJ > 0), the effective torque is exceeding the rated torque, thus indicating the Motor is generating heat.
  In consequence, it is essential to keep the readout of monitor TJ to zero (0) for continual "user defined" cycle operation.

Fig 7-33: Check of thermal loading after one cycle

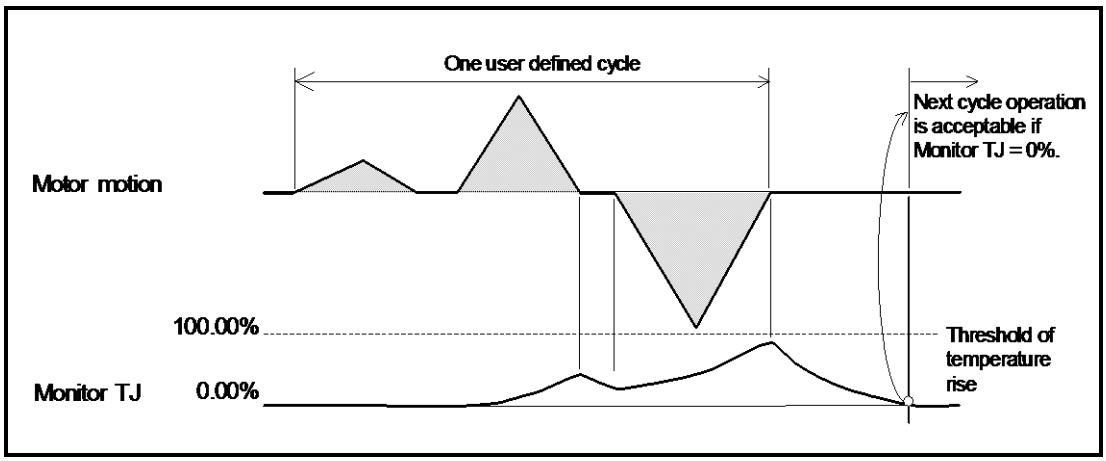

7.4. Analog Monitors

- You may monitor the internal state of the Driver Unit by the outputs of MON1 and MON2 (Analog monitor) on the front panel.
- The contents of the monitors are broadly classified into the following two categories.
  - ◊ Nine types of preset monitor
  - ◊ Analog monitors corresponding to the digital monitors via the RS-232C monitor command.
- The contents of the monitors are specified by the parameters: the parameter MN (First analog monitor) for the output MON1 (First analog monitor) and the parameter MX (Second analog monitor) for the output MON2 (Second analog monitor).
- Besides the contents of monitor, you may freely set the output data range and the offset value to the monitored data.

Table 7-36: Input/output and parameter related to analog monitor

Category	Name (code)	Function	Initial setting	Data range
Control output	MON1	First analog monitor	–	0 to 5 [V] output,2.5 [V] center
	MON2	Second analog monitor	–	
Parameter	MN	First analog monitor	0	0 to 8 Refer to "Table 7-37: Preset analog monitor." Or input **MN** + **Monitor code**.
	MNR	First analog monitor range	10.000	Data per +2.5 [V] (Depends in the parameter MN.)
	MNY	First analog monitor offset	0.000	Monitor output when the center is 2.5 [V]... (Depends on the parameter MN.)
	MX	Second analog monitor	0	0 to 8 Refer to "Table 7-37: Preset analog monitor." Or input **MX** + **Monitor code**.
	MXR	Second analog monitor range	10.000	Data per + 2.5 [V] (Depends on the parameter MX.)
	MXY	Second analog monitor offset	0.000	Monitor output when the center is 2.5[V]... (Depends on the parameter MX.)

7.4.1. Use of Preset Monitors

- The following monitors are available by setting the parameter MN or MX with a suffixed number from 0 to 8 to each parameter code.

Table 7-37: Preset analog monitor

Name (code)	Function	Data range	Unit
MN0,MX0	Current velocity	0.000 to ±10.000	s^{-1}
MN1,MX1	Commanded velocity	0.000 to ±10.000	s^{-1}
MN2,MX2	Velocity error	0.000 to ± 1.250	s^{-1}
MN3,MX3	Torque command	0.00 to± 100.00	%
MN4,MX4	øU current	0.00 to ±100.00	%
MN5,MX5	Transient position command	0.000 to ± 10.000	s^{-1}
MN6,MX6	Position error	0 to ± 127	pulse
MN7,MX7		0 to ± 16 383	
MN8,MX8	Thermal loading	0.00 to 100.00	%

Fig 7-34: Preset analog monitor

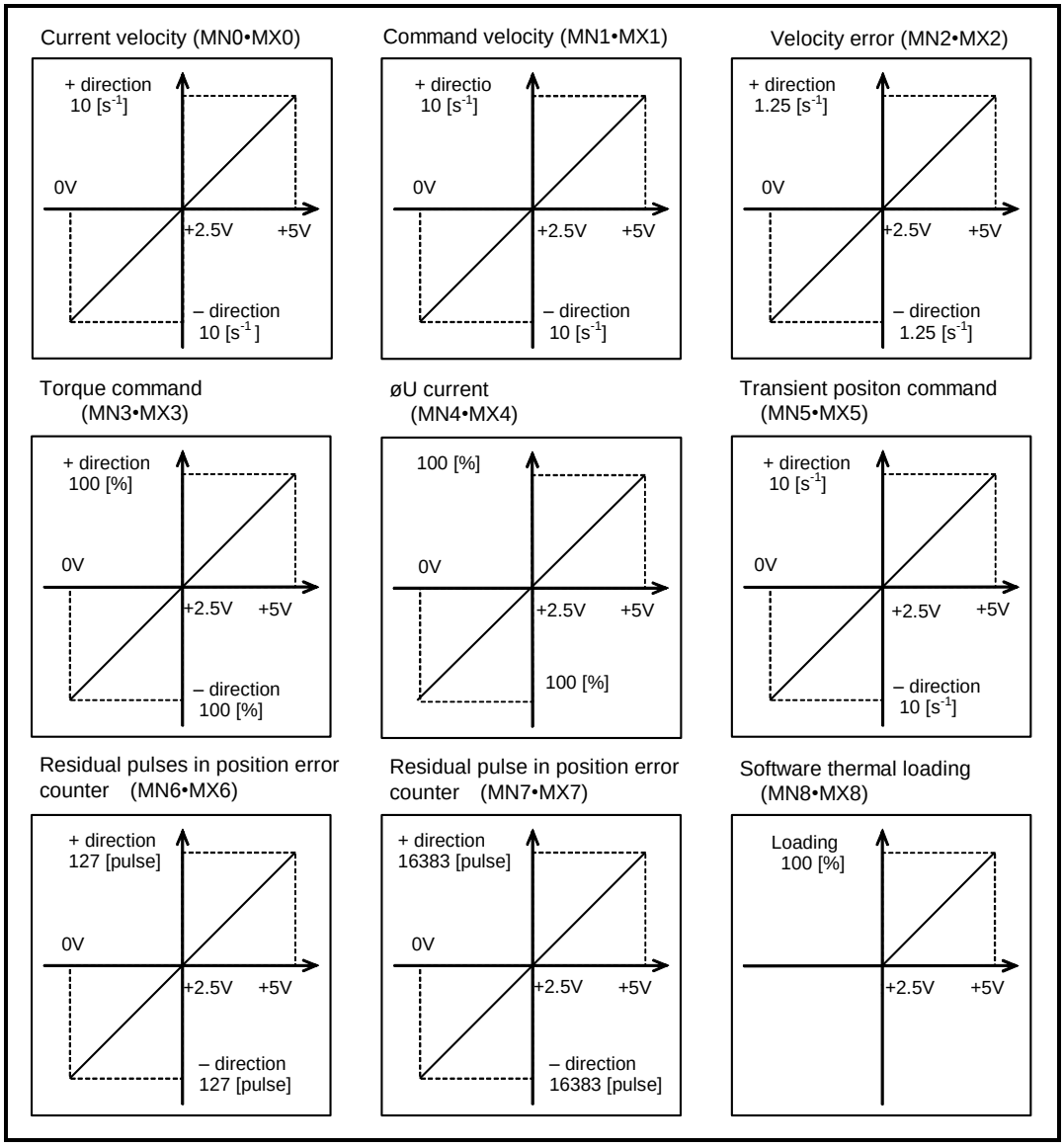

7.4.2. Customization of Monitor Data

- You can output the readout of RS-232C communication monitors to the analog monitors. You can freely set the offset value and the data range of monitors.

- For example, the followings describe the way to monitor the velocity ripple of Motor rotation at the rotational velocity range of 1 ±0.2 [s^{-1}].

1) The monitor TV (Current velocity) monitors the velocity. Type MNTV if you wish to output the current velocity on the first analog monitor.

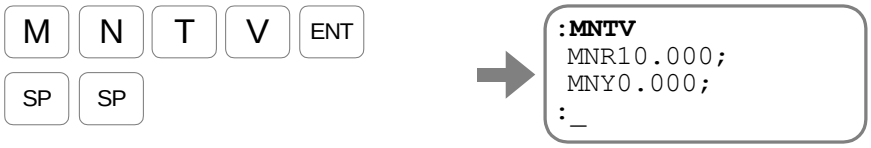

The screen indicates the default. The monitor center is set to 0 [s^{-1}] (MNY0.000) and the output range is set to ± 10 [s^{-1}] (MNR10 000). Input the [SP] for the prompt ": (colon)".

◊ An input of TV/MN also set the monitor TV.

2) Set the velocity to 1 [s^{-1}] at the monitor center.

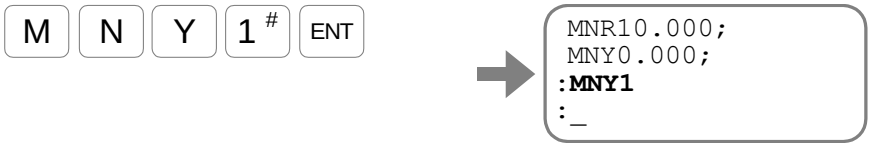

3) Set the output range to ± 0.2 [s^{-1}] from the monitor center.

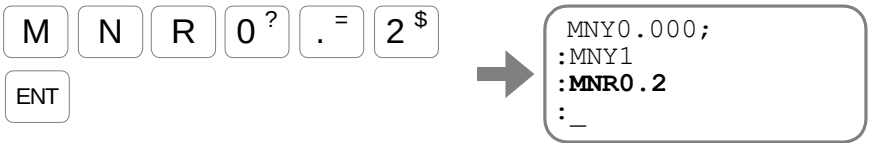

Fig 7-35: How to customize an analog monitor

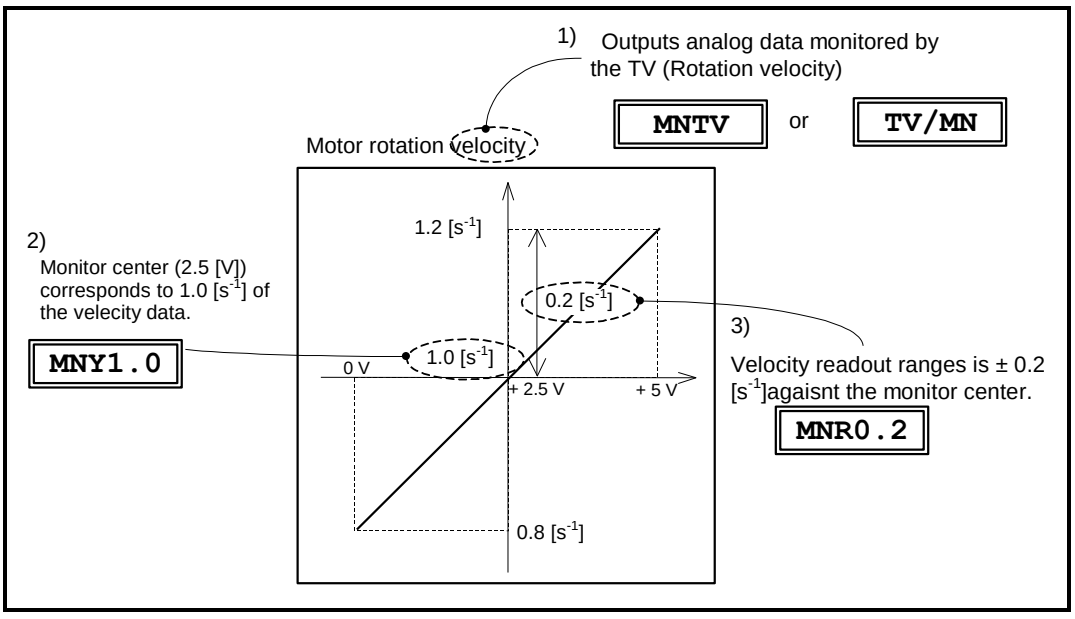

7.4.2.1. Analog Monitor for State of Control Inputs and Outputs Functions

- An input of **F** + **Function name (code) of input or output** is available to monitor the application state of a specified function.
  - ◊ For the inputs, the monitor reports how the Driver Unit recognizes the state of specified function.
  - ◊ For the outputs, the monitor reports the state just before application of the stability timer and the output logic.
    That is, the readout is the state before filtering (stability timer) the output condition.

- The readout by each function can be outputted to the analog monitor.
  - ◊ An analog filter is used for the output of analog monitor. As it takes 1 to 2 milli seconds for filtering to follow a change of digital signal, do not use the analog monitor for the check of precise input and output signal timing.

- For example, the following describes how to monitor the state of SVON input (Servo on)
  - ◊ The monitor FSVON (Function SVON) monitors the state of SVON input. Type MNFSVON if you wish to output the SVON input on the first analog monitor.

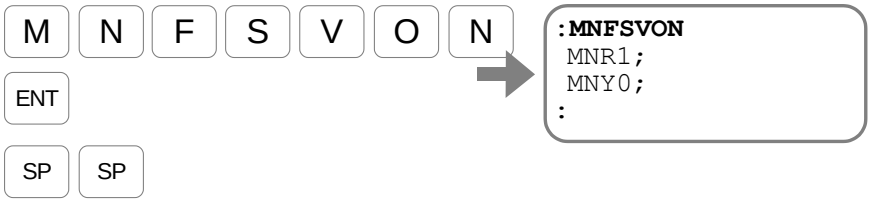

The readout indicates that the default of the monitor center is 0 (MNY0) and the output range is ± 1 (MNR1). Input the SP key to display the prompt (colon ":")

  - ◊ By this setting, the analog monitor outputs the state of SVON input: 5 [V] for "effective" and 2.5 [V] for "not effective."

- The format of FSVON/MN is also available for the monitor.

(Blank Page)

8. More Advanced Function

8.1. Assignment of Input/Output Function

- As shown in Fig 8-1 below, you can assign the function of inputs and outputs to each signal port of the connector CN2 (Input/Output signal connector).
  (Some ports are not available for function assignment.)
  - ◊ Switching to extended functions.
  - ◊ Setting the function that has been assigned to other port.
  - ◊ Masking the function of the port that is not in use.

- Thus, you may set the required functions to desired pin arrangement.
  - ◊ You may change the port polarity of each port and insert a filter to individual ports.

Fig 8-1: Control input/output connector CN2 and assignable function to each port

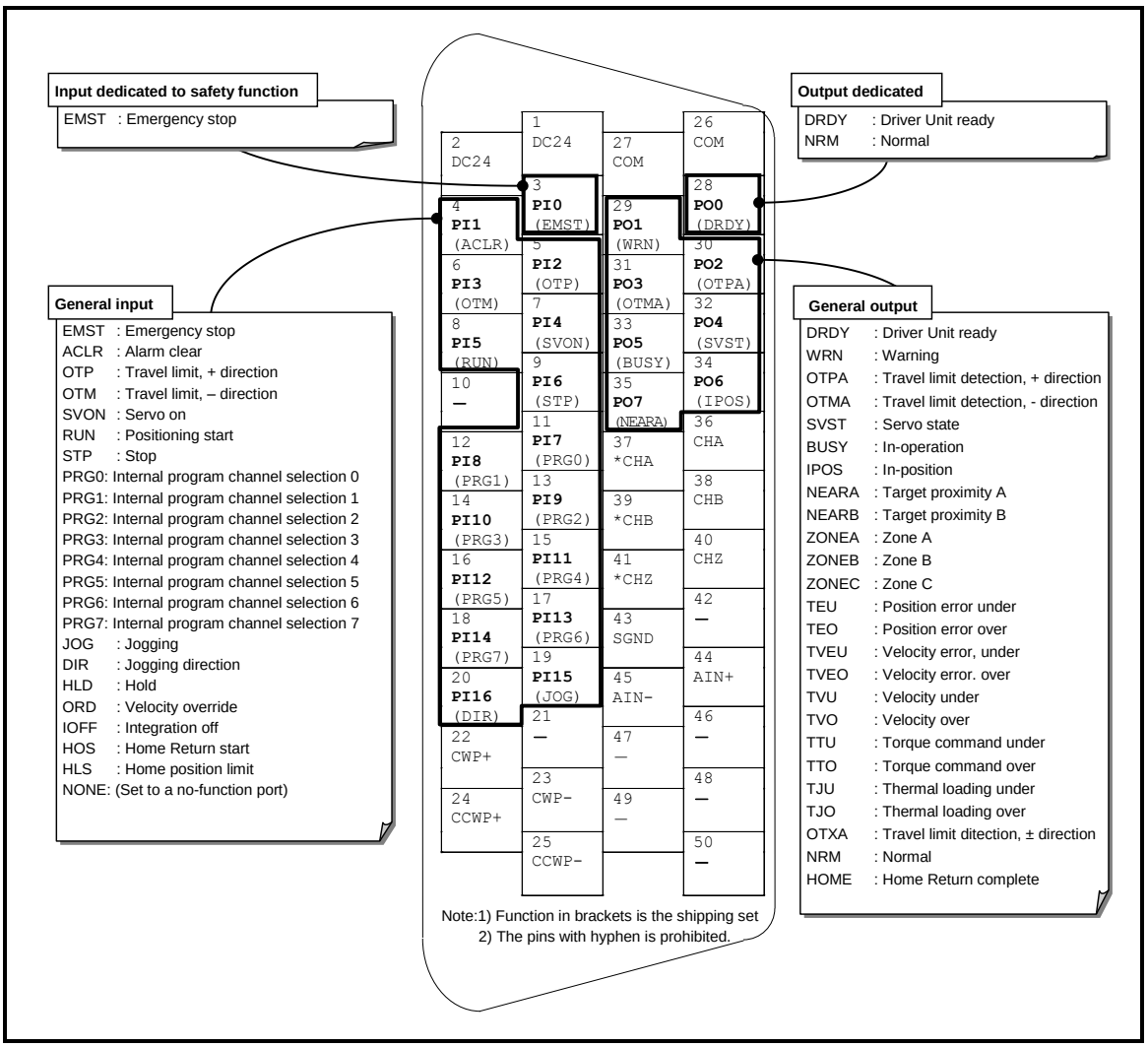

- The PI0 and PO0 are exclusive ports for the essential safety functions. There are some restrictions on these ports as follow.
  - ◊ You cannot change the function of the port PI0 (Pin No. 3: Input EMST). You can only set the port polarity and the anti-chattering timer to it.
  - ◊ You may change the function of the port PO0 (Pin No. 28: Output DRDY) to the output NRM (Normal) only. You cannot set the output logic and stability timer to it.

8.1.1. Function of Control Input

- You may set function, port polarity and filter to each control input port. This function permits you to change the preset input port function to other function, or to switch to one of extended functions.

  ◊ When you assign the same function to multiple input ports, the logical addition of each input shall be the input to the Driver Unit.
  (If one of the ports is activated, its function becomes effective.)

  ◊ When setting an input function that is not included in the shipping set, you must interchange it with a preset function. For example, you may set it to one of the inputs of PRG0 to PRG7 if you do not use all of 256 program channels.

Table 8-1: Input ports of the CN2 connector and assigned functions

Pin No.	Port No.	Shipping set		Signal name	Function	Logic (shipping set)
		Input code	Polarity			
3	PI0	EMST	Normally closed	Emergency stop	Shuts down operation and the Motor stops with dynamic brake.	OFF: Emergency stop ON: Normal
4	PI1	ACLR	Normally open	Alarm clear	Clears warning.	OFF → ON: Alarm clear
5	PI2	OTP	Normally closed	Over travel limit, +	Prohibits the rotation in CW direction.	OFF: Activated. ON: Not activated.
6	PI3	OTM	Normally closed	Over travel limit, –	Prohibits the rotation in the CCW direction.	OFF: Activated. ON: Not activated.
7	PI4	SVON	Normally open	Servo on	Actives the Motor servo.	OFF: Servo off ON: Servo on
8	PI5	RUN	Normally open	Program start	Starts program operation specified by the PRG inputs.	OFF → ON: Starts program
9	PI6	STP	Normally open	Stop	Stops operation and execution of programs.	OFF: Operation granted. ON: Decelerates. Prohibit operation
11	PI7	PRG0	Normally open	Internal program channel selection 0	Specifies a program channel (channel 0 to 255) to be executed by combination of ON and OFF of internal program channel selection signal 0 to 7.	OFF: 0 ON: 1
12	PI8	PRG1	Normally open	Internal program channel selection 1		
13	PI9	PRG2	Normally open	Internal program channel selection 2		
14	PI10	PRG3	Normally open	Internal program channel selection 3		
15	PI11	PRG4	Normally open	Internal program channel selection 4		
16	PI12	PRG5	Normally open	Internal program channel selection 5		
17	PI13	PRG6	Normally open	Internal program channel selection 6		
18	PI14	PRG7	Normally open	Internal program channel selection 7		
19	PI15	JOG	Normally open	Jogging	Starts and stops jogging operation.	OFF: Decelerates ON: Accelerates
20	PI16	DIR	Normally open	Jogging direction	Specifies the direction of jogging.	OFF: + direction ON: – direction

⚠ *Caution : If your System is custom made and has special Input/Output functions, follow its specification documents.*

- Above function settings are the shipping set.

Table 8-2: Extended input function

Pin No.	Port code	Signal name	Contact polarity	Signal name	Function	Logic
–	–	HLD	–	Hold	Pauses Motor operation and program execution.	OFF: Normal ON: Hold
–	–	ORD	–	Velocity override	Overrides velocity.	OFF : Normal ON: Override
–	–	IOFF	–	Integration OFF	Deactivates integral control.	OFF: Normal ON: Integration OFF
–	–	HOS	–	Home Return start	Starts Home Return operation.	OFF → ON: Starts Home Return operation
–	–	HLS	–	Home position limit	Reports the Motor is nearing to Home position proximity.	OFF : Normal ON: Home position proximity

8.1.2. Function of Control Output

- You can set control output function, output logic and stability timer to the output ports. This function permits you to change the preset input port function to other function, and to switch to one of extended functions.
  - ◊ You may set the same function to multiple output ports.
  - ◊ When setting an output function that is not included in the shipping set, you can interchange it with a preset function.
    For example, you may integrate the DRDY and WRN outputs to the NRM output, or integrate OTPA and OTPM outputs to increase the number of idle ports.

Table 8-3: Output ports of the CN2 connector and assigned function

Pin No.	Port No.	Shipping set		Signal name	Function	Logic (shipping set)
		Signal code	Logic			
28	PO0	DRDY	Positive	Driver Unit ready	Reports that the Driver Unit is ready for operation. (The output opens when the Drover Unit is not ready or an alarm occurs.)	Open: Alarm Closed: Normal
29	PO1	WRN	Negative	Warning	Reports warning.	Open: Warning Closed: Normal
30	PO2	OTPA	Negative	Over travel limit, + direction	Over travel limit (software of hardware), + direction limit	Open: + direction limit activated. Closed: Normal
31	PO3	OTMA	Negative	Over travel limit, – direction	Over travel limit (software of hardware), – direction limit	Open: – direction limit activated. Closed: Normal
32	PO4	SVST	Positive	Servo state	Reports state of the servo.	Open: Servo is OFF. Closed: Servo is ON.
33	PO5	BUSY	Positive	In-operation	Reports operation status.	Open: Idle Closed: In operation
34	PO6	IPOS	Positive	Positioning complete	Reports conditions of position error and positioning operation.	Open: Positioning is not completed, or lost commanded position data. Closed: In position and holding commanded position data.
35	PO7	NEARA	Positive	Target proximity A	Reports the Motor is nearing to the commanded position.	Open: Not in proximity Closed: In proximity

⚠ *Caution : If your System is custom made and has special Input/Output function, follow its specification documents.*

- Above function settings are the shipping set.

Table 8-4: Extended output function

Pin No.	Port No.	Signal code	Logic	Signal name	Function	Logic (in case of positive logic)
–	–	NEARB	–	Target proximity B	Reports the Motor is nearing to the target position.	Open: Not in the proximity. Closed: The Motor is nearing to the target position.
–	–	ZONEA	–	Area A	Warns that the Motor is in the off-limits area.	Open: Not active. Closed: Limit is activated.
–	–	ZONEB	–	Area B		
–	–	ZONEC	–	Area C		
–	–	TEU	–	Position error under	Reports the positioning error.	Open: Out of the limit. Closed: In the limit
–	–	TEO	–	Position error over		Open: Out pf the limit. Closed: Position error is under the threshold.
–	–	TVU	–	Velocity under	Reports the condition of the velocity.	Open: Out of the limit. Closed: Position error is under the limit.
–	–	TVO	–	Velocity over		Open: Out of the limit. Closed: Velocity is over the limit.
–	–	TTU	–	Torque command under	Reports torque command output.	Open: Out of the limit. Closed: The command is under the threshold.
–	–	TTO	–	Torque command over		Open: Out of the limit. Closed: The command is under the threshold.
–	–	TJU	–	Thermal loading under	Reports the condition of thermal loading.	Open: Out of the limit. Closed: Thermal loading is under the threshold.
–	–	TJO	–	Thermal loading over		Open: Out of the limit Closed: Thermal loading is over the threshold.
–	–	OTXA	–	Over travel limit, ± direction	Reports condition of over travel limits (software and hardware), ± direction	Open: Out of the limit. Closed: A limit activated.
–	–	NRM	–	Normal	Reports an occurrence of warning or alarm.	Open: Alarm or warning is occurring. Closed: Normal
–	–	HOME	–	Home Return completed	Reports completion of Home Return and being on the Home position.	Open: Home Return is not completed, or the commanded position is not the Home position. Closed: Home Return completed and the commanded position is not the Home position.
–	–	HCMP	–	Home position defined.	Reports that the position data of the Home position is set.	Open: The Home position is not defined. Closed: The Home position is defined.

8.1.3. Editing Function of Control Input and Output

8.1.3.1. Editing Control Input Function

- The command PI (Edit input port) edits the control input ports.
- When editing mode of control inputs is established by the command PI, settings of the parameter FN (Port function) and NW (Anti-chattering timer) becomes effective.
  - ◊ Deactivation of the Motor servo is required for setting these parameters.
  - ◊ Reboot of the power is not necessary because the edited result by the command PI becomes immediately effective.
- The control input port PI0 is exclusively used for safety function. This means that the function setting to the port (Parameter FN) is fixed to the input EMST (Emergency stop).
  - ◊ The parameter AB (Input port polarity) and parameter NW (Anti-chattering timer) are effective on the port PI0.
- The monitor IO (Input/Output monitor) reads out conditions of each function. Refer to "7.3.1. Monitoring Way for Control Input/Output Signal" for more details.

Table 8-5: Editing command for control input port

Category	Command name (code)	Name/Function	Initial setting	Data range	Unit
Editing command	PI	Edit input port • Edits function of control input.	–	0 to16	port
	★PI/RS	• Resets function of a specified control input port (Example: PI1/RS)	–	0 to16	port
	★PI/CL	• Resets all control input ports.	–	Resets all control ports to the shipping set.	–
Port parameter	AB	Input port polarity • Sets input port polarity	–*	0: Normally open 1: Normally closed	–
	NW	Anti-chattering stability timer	0.2	0.0 to 1 000.0	ms
Monitor	TPI	Tell input port • Monitors function of control input	–	0 to 16	port
	TPI/AL	• Monitors all function settings of control input.	–	Reads out all function settings of control input port.	–

★: Requires the password.

*: Initial setting depends on each port.

- The example shown below describes how to change the function of input port PI14 from the input PRG7 (Internal program channel selection) to the input HLD (Hold).

1) Input the command MO (Motor off) to deactivate the Motor servo.

2) Specify the input port number by the command PI to display the setting of the parameter FN. (Port parameter) (The shipping set of the input port is PRG7.)

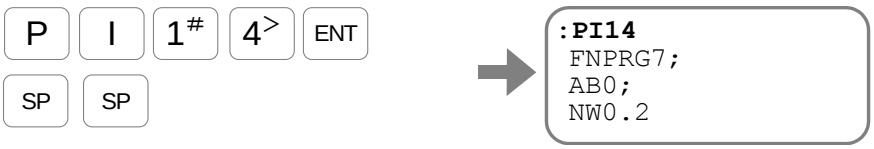

Every input of the [SP] key reads out the parameter AB and the parameter NW.

3) Change the function to the input HLD.

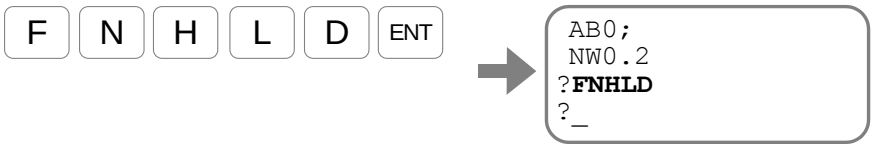

Set the parameter AB and the NW in the same way.

4) Input "?" when the prompt "?" is on the last line to confirm the settings.

Every input of the [SP] key reads out the parameter FN setting, the parameter AB, and the parameter NW.

5) Input the [ENT] key to complete editing, while the prompt "?" is on the screen.

6) Activate the Motor servo by the command SV (Servo on).

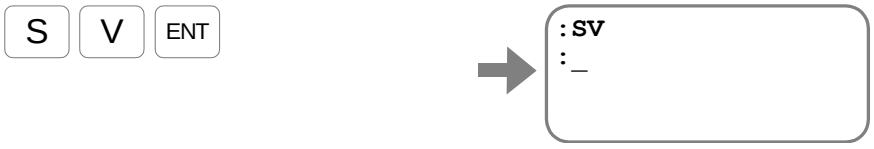

8.1.3.2. Editing Control Output Function

- Use the command PO (Edit output port) for editing the control output ports.
- When the command PO establishes the editing mode of control output port, you can set the parameter FN (Port function), the parameter GC (Output logic) and the parameter ST (Stability timer).
  - ◊ Rebooting the Driver Unit is not required, since a setting by the command PO becomes immediately effective.
- The output port PO0 is exclusively used for the safety function. Thus, setting to the parameter FN (Port function) to the port PO0 shall be either one of the DRDY (Driver Unit ready) or the NRM (Normal).
  - ◊ You cannot change the setting of the parameters GC and ST.
- The monitor IO (Input/Output monitor) reports outputs conditions of each function. Refer to "7.3.1. Monitoring Way for Control Input/Output Signal.
- The command OP (Forcible output) forcibly changes the settings of output port function. Refer to "8.1.3.4. Forcible Output in Setting of Output Port Function" for details.

Table 8-6: Edit command for control output port

Category	Command name (code)	Name/Function	Initial setting	Data range	Unit
Edit command	PO	Edi output port • Edits output port.	–	0 to 7	Port
	★PO/RS	Resets function of specified port (Example: PO1/RS)	–	0 to 7	Port
	★PO/CL	Resets all output port function	–	Resets all output ports to the shipping set.	–
Port parameter	FN	Port function	–*	Any of the following DRDY, WRN, OTPA, OTMA, SVST, BUSY, IPOS, NEARA, NEARB, ZONEA, ZONEB, ZONEC, TEU, TEO, TVU, TVO, TTU, TTO, TJU, TJO, OTXA, NRM, HOME, HCMP, NONE	
	GC	Output logic	–	0: Positive logic 1: Negative logic The initial settings are depending on each port.	–
	ST	Stability timer	0.0	0.0 to 1 000.0	ms
Monitor	TPO	Tell output port • Monitors function of output port	–	0 to 7	Port
	TPO/AL	• Monitors all function setting of control output port	–	Reads out all settings of the output ports.	–

★: Requires the password.

- The example shown below describes how to change the function of output PO7 from the output NEARA (Target proximity A) to the output ZONEA (Zone A).

1) Specify the output port with the command PO to read out the setting of the parameter FN. (The shipping set of the output port PO7 is the output NEARA.)

Every input of the [SP] key displays the parameters GC and ST respectively.

2) Change the output function to the output ZONEA.

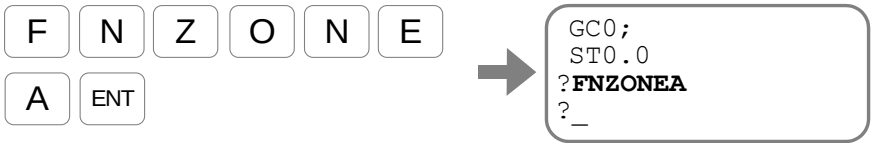

Set the parameters GC and ST in the same way.

3) For the confirmation of the settings, input "?" when the prompt "?" is on the bottom line.

Every input of the [SP] key displays the parameter FN and GC respectively.

4) Input the [ENT] key to quit editing when the prompt "?" is on the last line.

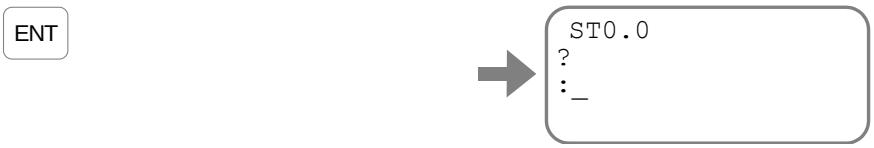

8.1.3.3. Masking Control Output Function

- The example shown below describes how to change the function of input port PI6 from the input STP (Stop) to the function NONE (Mask function).

1) Input the command MO (Motor off) to deactivate the Motor servo.

2) Specify the input port number with the command PI (Edit input port) to read out setting of the parameter FN (Port function).

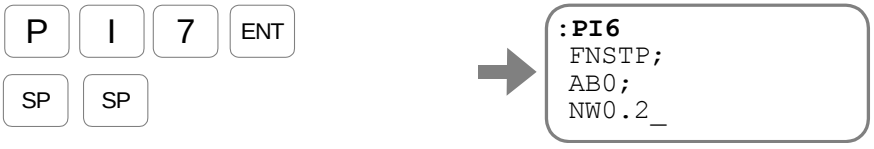

Every input of the [SP] key displays the parameters AB (Input port polarity) and NW (Anti-chattering stability timer).

3) Change the function to the NONE (Mask function).

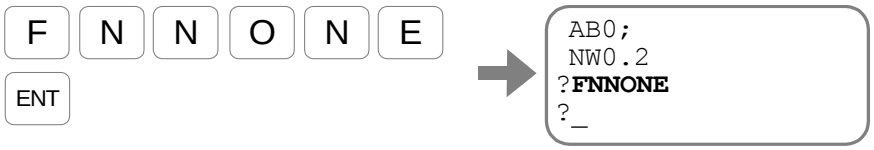

4) For the confirmation, input "?" key when the prompt "?" is on the last line.

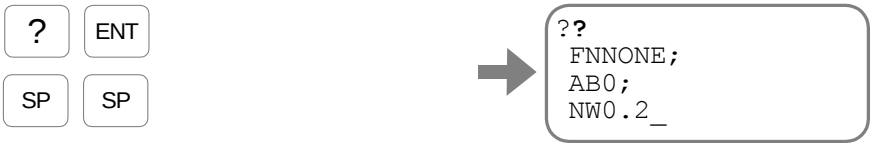

Every input of the [SP] key displays the parameters FN, AB and NW.

5) Input the [ENT] key to terminate editing when the prompt "?" is on the last line in the screen.

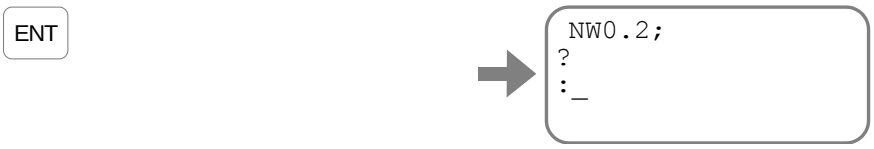

6) Input the command SV (Servo on) to turn on the Motor servo.

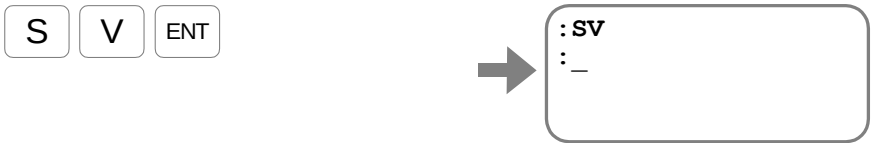

8.1.3.4. Forcible Output in Setting of Output Port Function

- The command OP (Forcible output) forcibly changes the setting of control output ports of PO0 to PO7 in the connector CN2.
- This function is used to check the interface with the master controller.
- The example shown below describes how to forcibly open the port of pin 28. The function of the pin 28 is the output DRDY (Driver Unit ready) and, thus, opening this output port is to report an occurrence of alarm. Thereby you can check if the master controller is able to detec the abnormal operation of Driver Unit.

1) The port name of the 28th pin is PO0 as shown on Table 8-3 “Output ports of the CN2 connector and assigned function.” Table 8-3: Output ports of the CN2 connector and assigned function

2) Input the password “/NSK ON”.

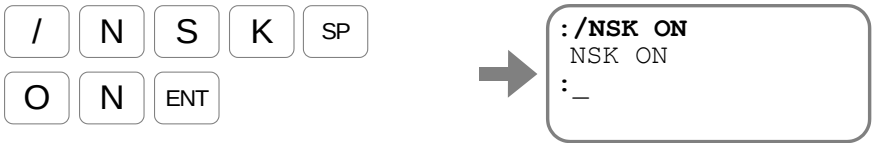

3) Input as OPXXXXXXX0 when forcibly opening the PO0 output and leaving other ports unchanged.

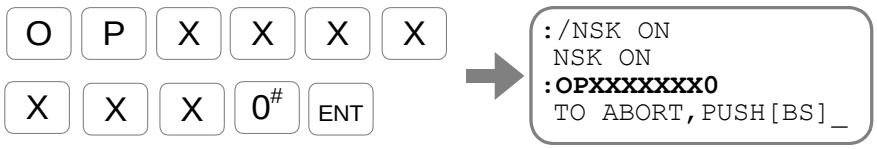

The port PO0 is forcibly opened.

Input the [BS] key to terminate to terminate forcible change in output port.

8.2. Extended Control Input

8.2.1. Input HOLD: HLD

- This input pauses the operation caused by an internal command. Deactivation of the input HOLD starts the operation again.

Table 8-7: Signal logic of input HLD

Logic	Description
OFF	• Deactivates the signal.
ON	• Starts deceleration and stops operation.

- When the HLD input is turned ON in the middle of operation caused by an internal command, such as positioning command, jogging and Home Return, the Motor decelerates with the deceleration rate specified in the operation program, then stops.
  - ◊ This input is not effective for the pulse train command.
  - ◊ If the input is turned ON in the middle of setting a parameter to a program, the Driver Unit completes the setting of the program line, then holds operation.

- While the operation is being hold, the Driver Unit holds operation caused by an internal command or execution of a program. However the output BUSY (In-operation) remains closed.

- The held operation starts again when the input HLD is OFF. If the operation involves rotation of the Motor, the Motor accelerates again.
  - ◊ Occurrence of an alarm and activation of the input STP (Stop) signal cancels the holding state and the output BUSY opens. In such state, deactivation of the input HLD does not start the operation again.

- The output BUSY closes and the operation remains held while the input HLD is being ON, even the input RUN (Start program) or the operation command is inputted.

Fig 8-2: Signal timing of the input HLD (Internal command)

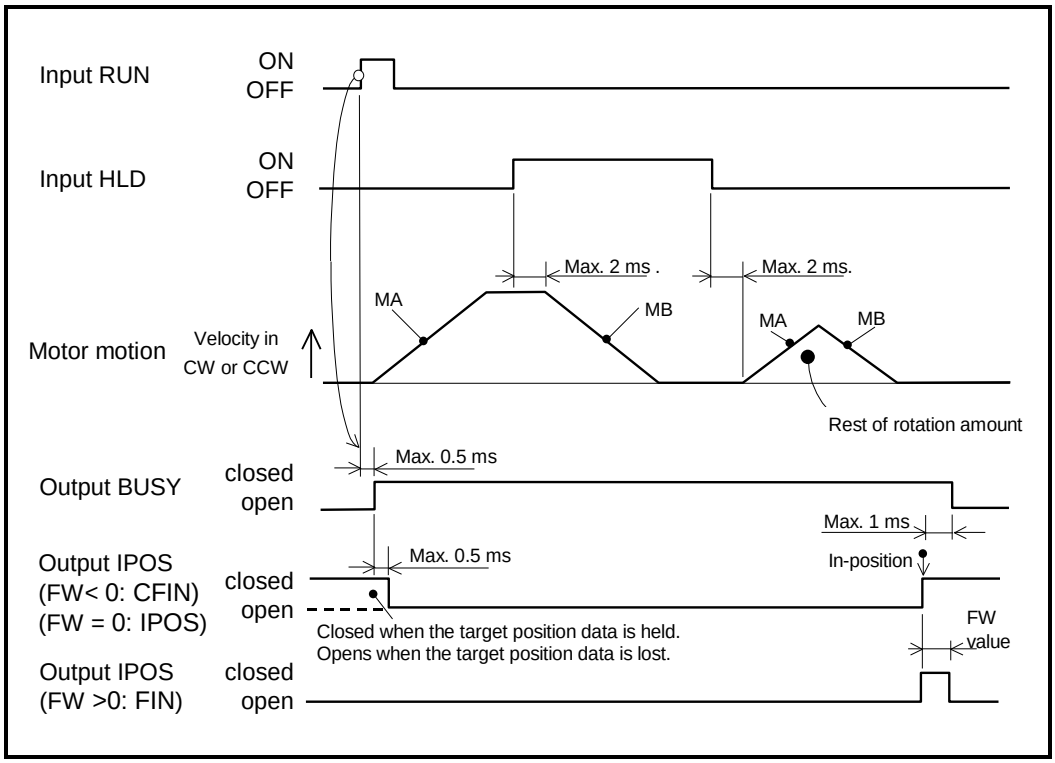

8.2.2. Velocity Override: ORD

- In the middle of positioning operation, the input ORD overrides the programmed velocity with the preset overriding rate.

Table 8-8: Signal logic of the input ORD

Logic	Description
OFF	Does not override.
ON	Override the programmed velocity.

- When the input ORD is turned ON in the middle of positioning operation caused by an internal command, such as the command for positioning, jogging and Home Return, the Driver Unit overrides the programmed velocity and changes it according to the preset override change rate.

Table 8-9: Parameter related to the input ORD

Parameter name (code)	Name/Function	Initial setting	Data range	Unit
OV	Velocity override	100.00	0.00 to 200.00	%

- When the programmed velocity is overridden, the System changes the operating velocity with preset acceleration and deceleration.
  - ◊ The acceleration, deceleration and acceleration profiling for overriding velocity follow the programmed settings that has been dealt with.

- When the ORD input activates during the operation of which programmed velocity is MV2.000 [s^{-1}] and override ratio is OV150%, the target velocity is changed to 3 [s^{-1}].
  - ◊ The overridden velocity is limited to 10 [s^{-1}]. When the override velocity exceeds the limit, it shall be limited to 10 [s^{-1}].

Fig 8-3: Signal timing of the ORD input (In case of OV150)

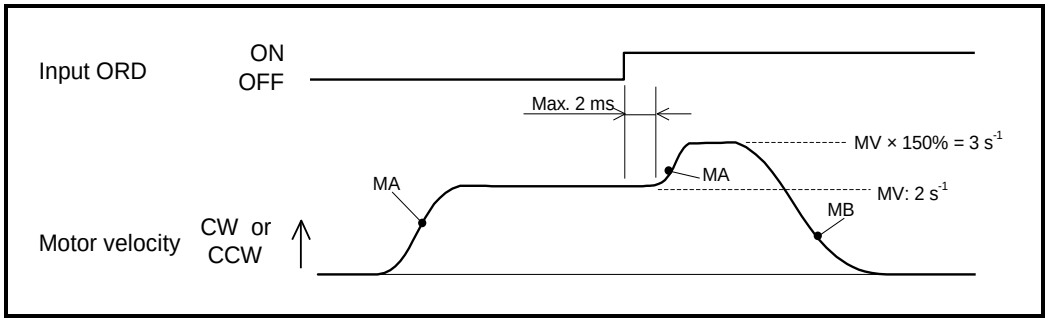

Fig 8-4: Signal timing of the ORD input: (In case of OV50)

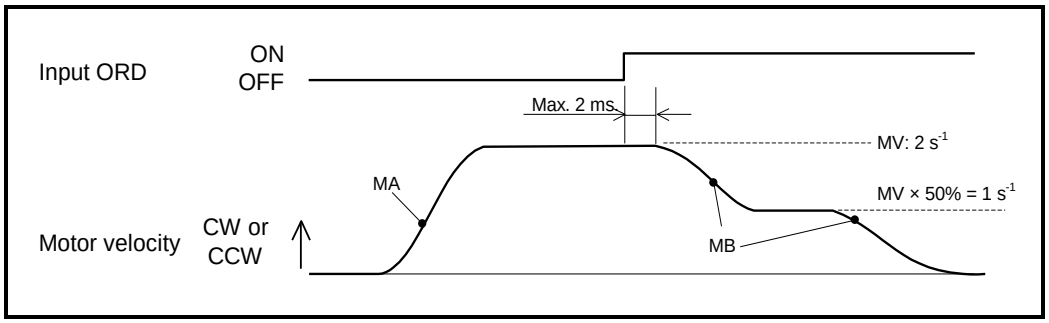

8.2.3. Integration OFF: IOFF

- The input controls the effect of integral control (Motor settling motion) and lowers the proportional gain in the velocity loop.

- When the Motor is held by such reasons as external interference from a brake, the driver unit issues a large amount of current in attempt to catch up with the target position. When this condition continues, the Motor will emit abnormal heat. This input is used when the integral control becomes unnecessary due to interruption by external devices.

Table 8-10:Signal logic of the input IOFF

Logic	Description
OFF	Do nothing.
ON	Lowers the effects of integral control and the velocity loop proportional gain

- When the input IOFF activates, the effect of integral control is controlled to the set ratio by the parameter LB (Observer limiter). Also the parameter LG (Lower gain) lowers the velocity loop proportional gain to the specified ratio.

  ◊ For example, the integral control effect becomes 0% if the parameter LB is set to LB0.0, as soon as the input IOFF activates.

  ◊ The lowering gain function does not work for the command AT (Auto tuning).

Table 8-11: Parameter related to the input IOFF

Parameter	Name/Function	Initial setting	Data range	Unit
LG	Lower gain • Lowering ratio of velocity loop proportional gain	50.00	0.00 to 100.00	%
LB	Observer limiter	0.00	0.00 to 100.00	%

Fig 8-5: Signal timing of the input IOFF

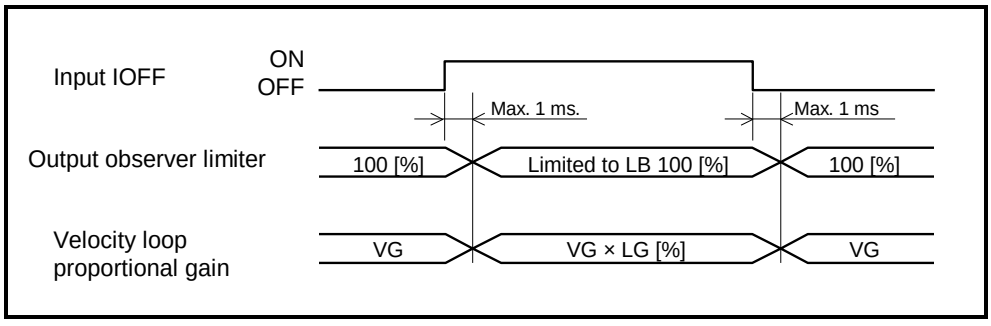

8.2.4. Home Return Start: HOS

- Starts a Home Return operation.

Table 8-12: Signal logic of the input HOS

Logic	Description
↓ (ON → OFF)	Not effective
↑ (OFF → ON)	Starts operation

- Starts the Home Return operation specified by the parameter OS (Origin setting mode).
- Confirm that all of the following conditions are met before starting the Home Return operation.
  1) Other internal command, such as positioning, jogging and Home Return, is not established.
     ◊ Confirm that the output BUSY (In-operation) is open.
  2) The Motor servo is active.
     ◊ Confirm that the output SVST (Servo on) is closed.
  3) No alarm or warning is reported and the input STP (Stop) is OFF.
- Warning A5 (Origin undefined) occurs if you execute an absolute positioning operation after you abort the Home Return operation.
  ◊ Complete the Home Return operation, and thus define the Home position of the scale system.
- Refer to "8.8. Home Return" for the procedures of the Home Return operation.

8.2.5. Home Position Limit: HLS

- When performing Home Return operation, this input monitors that the Motor is nearing the proximity of the Home position.

Table 8-13: Signal logic of the input HLS

Logic	Description
OFF	Normal
ON	Home position proximity

- When the parameter OS (Home Return mode) is set to OS1, OS3, OS4 and OS5, the System performs Home Return operation and Home position setting according to the input HLS.
- Refer to "8.8.1. Home Return Operation via the Home Position Sensor" for the procedure of Home Return.
- Refer to "8.8.4. Position Adjustment of Home Limit Sensor" for setting the position of Home limit sensor.

8.3. Extended Control Output

8.3.1. In-zone Output: ZONEA, ZONEB, and ZONEC

- The output reports that the Motor is in the predetermined zone.

Table 8-14: Signal logic of outputs of ZONEA, ZONEB and ZONEC

Logic	Description
Open	Out of the zone
Closed	In the specified zone, or assuring the minimum output elapsing time.

Table 8-15: Parameter related to the outputs ZONEA, ZONEB and ZONEC

Signal name (code)	Name	Initial setting	Data range	Unit
ZAS ZBS ZCS	Start point of zone A Start point of zone B Start point of zone C	0	0 to 2 621 439	pulse
ZAE ZBE ZCE	End point of zone A End point of zone B End point of zone C	0	0 to 2 621 439	pulse
ZAW ZBW ZCW	Zone A stability timer Zone B stability timer Zone C stability timer	0.0	0.0 to 10 000.0	ms

- The parameters ZAS (Start point of zone A) and ZAE (End point of zone A) set the zone. The zone starts from the start point in the counting up direction of scale data and ends at the end point as shown in the figure below.
  - ◊ The zones B and C can be set by the parameters ZBS, ZBE, ZCS and ZCE respectively in the same way described above. .

Fig 8-6: Setting of zone A

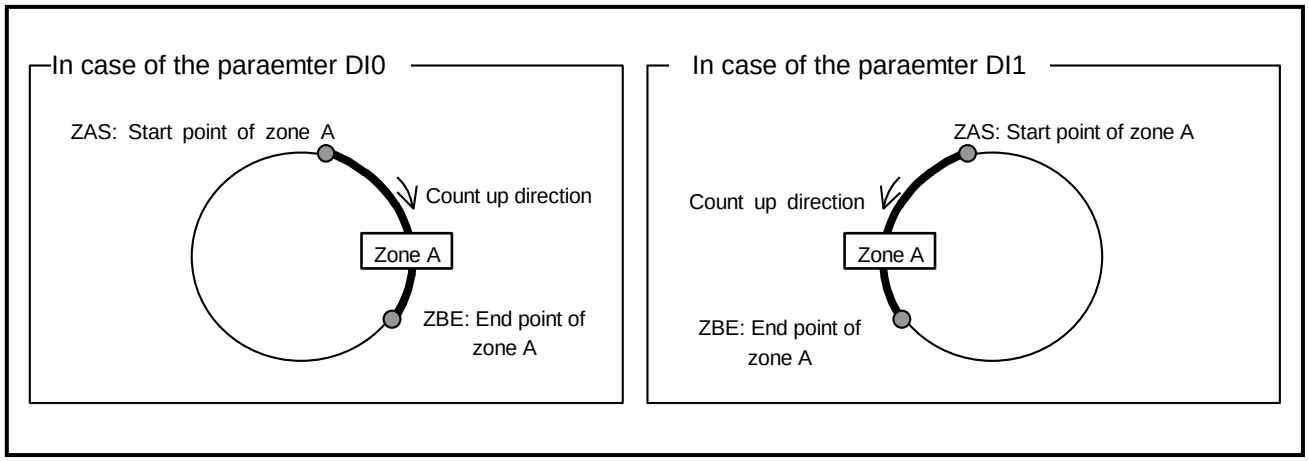

- The output closes when the Motor position data is in the set zone.
  - ◊ When the Motor passes the zone with high speed or when the zone is too narrow, the zone passage time gets short. The parameter ZAW (Zone passage stability timer) is available to set the minimum time width for detecting the passage.

Fig 8-7: Example: Signal timing of the output ZONEA

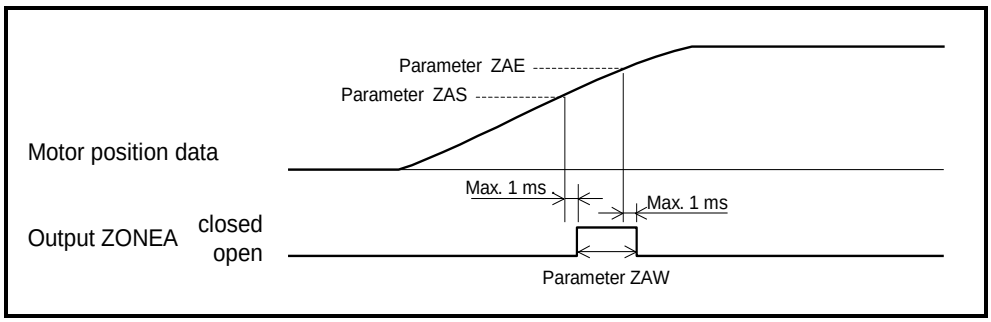

- The outputs ZONE (In-zone) do not function in the middle of Home Return.

8.3.2. Outputs of Operating Conditions

- The outputs report the Motor conditions against the thresholds.
- The table below lists available outputs.

Table 8-16: Outputs for Motor conditions

Output objective	Signal code	Signal name	Function	Logic (In case of positive logic)
Position error	TEU	Tell position error, under	Reports the condition of position error	Open: Not activated, Closed: Position error is less or equal to the setting of parameter TEU.
	TEO	Tell position error, over		Open: not activated. Closed: Position error is greater or equal to the setting of parameter TEO.
Velocity error	TVEU	Tell velocity error, under	Reports the condition of current velocity error.	Open: Not activated. Closed: Current position is less or equal to the setting of parameter TVEU.
	TVEO	Tell velocity error. over		Open: Not activated. Closed: Current position is greater or equal to the setting of parameter TVEO.
Velocity	TVU	Tell velocity, under	Reports the condition of current velocity.	Open: Not activated. Closed: Current position is less or equal to the setting of parameter TVU.
	TVO	Tell velocity. over		Open: Not activated. Closed: Current position is greater or equal to the setting of parameter TVO.
Torque command	TTU	Tell torque command, under	Reports the condition of torque command.	Open: Not activated. Closed: Torque command is less or equal to the setting of parameter TTU.
	TTO	Tell torque command, over		Not activated. Closed: Torque command is greater or equal to the setting of parameter TTO.
Thermal loading	TJU	Tell thermal loading, under	Reports the condition of thermal loading.	Open: Not activated. Closed: Thermal loading is less or equal to the setting of parameter TJU.
	TJO	Tell thermal loading, over		Open: Not activated. Closed: Thermal loading is greater or equal to the setting of parameter TJO.

8.3.2.1. Position Error: TEU (Position Error, Under) and TEO (Position Error, Over)

- Outputs the condition of position error counter against the thresholds.
- The output IPOS (In-position, IPOS mode) focibly opens while inputting a motion command or the target position is being lost. At the same time, this output only reports compared results between the position error and the thresholds.

Table 8-17: Parameter related to the outputs TEU and TEO

Parameter (code)	Function	Initial setting	Data range	Unit
TEU	Position error is under the threshold.	0	0 to 2 621 439	pulse
TEO	Position error is greater or equal to the threshold.	0	0 to 2 621 439	pulse

- The output TEU closes when the absolute value of position error counter is less or equal to the setting of the TEU. The TEO closes when the absolute value of position error counter is greater or equal to the setting of parameter TEO.
- Setting of the parameter ST (Stability timer) with the command PO (Edit control output) controls frequent opening and closing of output port caused by fluctuating position error.
- Setting of the parameter ST to the output TEU acts as the following.
  - ◊ The TEO output closes when the position error is less or equal to the setting of parameter TEU longer than the time set by the parameter ST. It opens when the position error falls, even momentarily, below the TEU setting.
- Setting of the parameter ST to the output TEO acts as the following.
  - ◊ The output TEO closes when the position error is greater or equal to the setting of parameter TEO longer or equal to the set time by the ST. It opens when the position error falls, even momentarily, below the TEO setting.

Fig 8-8: Signal timing of the outputs TEU and TEO

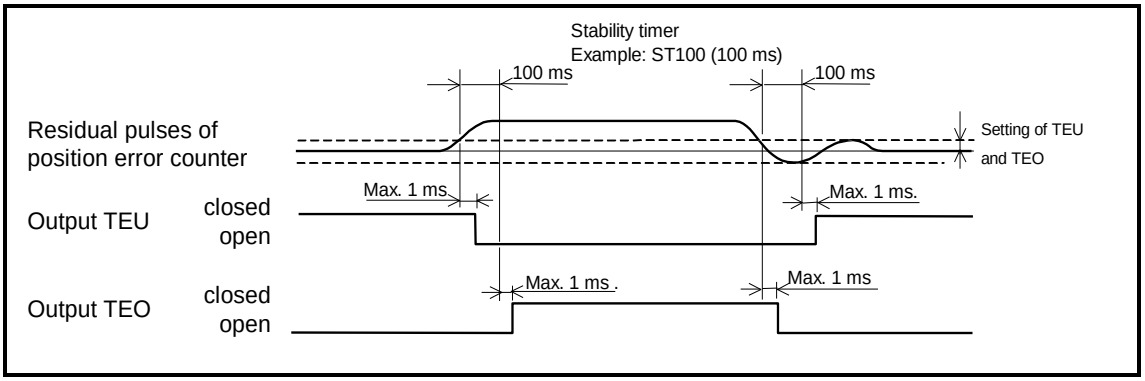

8.3.2.2. Velocity: Outputs TVEU (Velocity Error, Under) and TVEO (Velocity Error, Over)

- Outputs the condition of velocity error against the threshold.

Table: 8-18: Parameter related to the outputs TVU and TVO

Parameter (code)	Function	Initial setting	Data Range	Unit
TVEU	Threshold: Velocity error, under	0.000	0.000 to 10.000	s^{-1}
TVEO	Threshold: Velocity error, over	0.000	0.000 to 10.000	s^{-1}

- The output TVEU closes when the velocity error is less or equal to the set value of TVEU.
  The output TVEO closes when the velocity error is greater or equal to the set value of TVEO.

8.3.2.3. Velocity: Outputs TVU (Velocity, Under) and TVO (Velocity, Over)

- Outputs the condition of velocity against the threshold.
- This output can be used for such purposes as checking the stop of Motor.

Table 8-19: Parameter related to the outputs TVU and TVO

Parameter (code)	Function	Initial setting	Data Range	Unit
TVU	Threshold: Velocity, under	0.000	0.000 to 10.000	s^{-1}
TVO	Threshold: Velocity, over	0.000	0.000 to 10.000	s^{-1}

- The output TVU closes when the absolute value of velocity is less or equal to the set value of TVU.
  The output TVO closes when the absolute value of velocity is greater or equal to the set value of TVO.

8.3.2.4. Torque Command: Outputs TTU (Torque Command, Under) and TTO (Torque Command, Over)

- Outputs the condition of torque command against the threshold.

Table 8-20: Parameter related to the outputs TTU and TTO

Parameter (code)	Function	Initial setting	Data Range	Unit
TTU	Threshold: Torque command, under	0.00	0.00 to 100.00	%
TTO	Threshold: Torque command, over	0.00	0.00 to 100.00	%

- The output TTU closes when the absolute value of torque command is less or equal to the set value. The output TTO opens when the absolute value of torque command is greater or equal to the set value.

8.3.2.5. Thermal Loading: Outputs TJU (Thermal Loading, Under) and TJO (Thermal Loading, Over)

- Outputs the conditions of thermal loading against the threshold.
- It is useful to decide if the System can start the next operation cycle by confirming the condition on the thermal loading to the Motor.

Table 8-21: Parameter related to the outputs TJU and TJO

Parameter (code)	Function	Initial setting	Data range	Unit
TJU	Threshold: thermal loading, under	0.00	0.00 to 100.00	%
TJO	Threshold: Thermal loading, over	0.00	0.00 to 100.00	%

- The output TJU closes when the setting of parameter TJU is less or equal to the threshold.
  The output TJO closes when the setting of parameter TJO is greater or equal to the threshold.
- If the Motor is forced to rotate exceeding its rated conditions, it continues overheating, and eventually the warning A3 (Software thermal loading) occurs.
- When the thermal loading increases beyond 0% in the middle of one 'user defined' operation cycle, you require holding the next operation until the thermal loading becomes zero (0).

Fig 8-9: Confirmation of starting operation cycle (Parameter JUO)

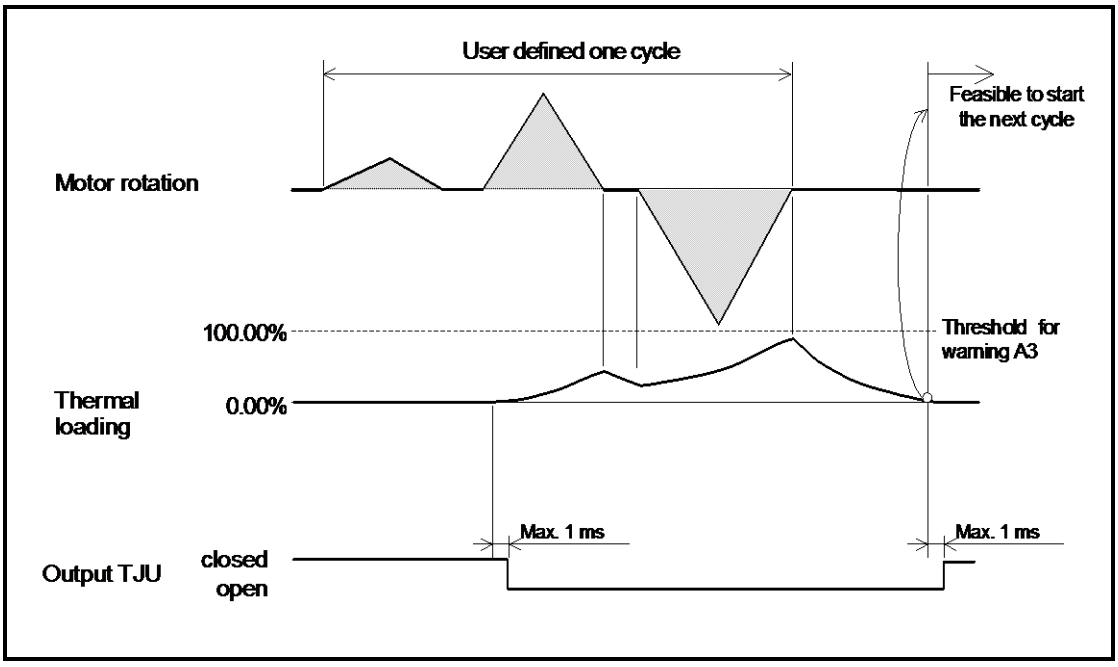

8.3.3. Travel Limit Output (±): OTXA

- Reports that the Motor gets in the area specified by the travel limits.
  (For both cases of software and hardware over travel limits.)

- Different from the outputs OTPA and OTMA, there is no function to distinguish the direction of limit switch.

Table 8-22: Signal logic of the output OTXA

Logic	Description
Open	Normal
Closed	Limit activated

- When the travel limit activates, the following alarms will occur.

Table 8-23: Indication of 7 segments LED at activation of over travel limit

7segmetns LED	Command TA (Tell alarm)	Description
F2	**F2>Software Over Travel**	Software over travel
F3	**F3>Hardware Over Travel**	Hard ware over travel

Fig 8-10: Motion timing with the input OTP and the output OTXA (In case of positive logic)

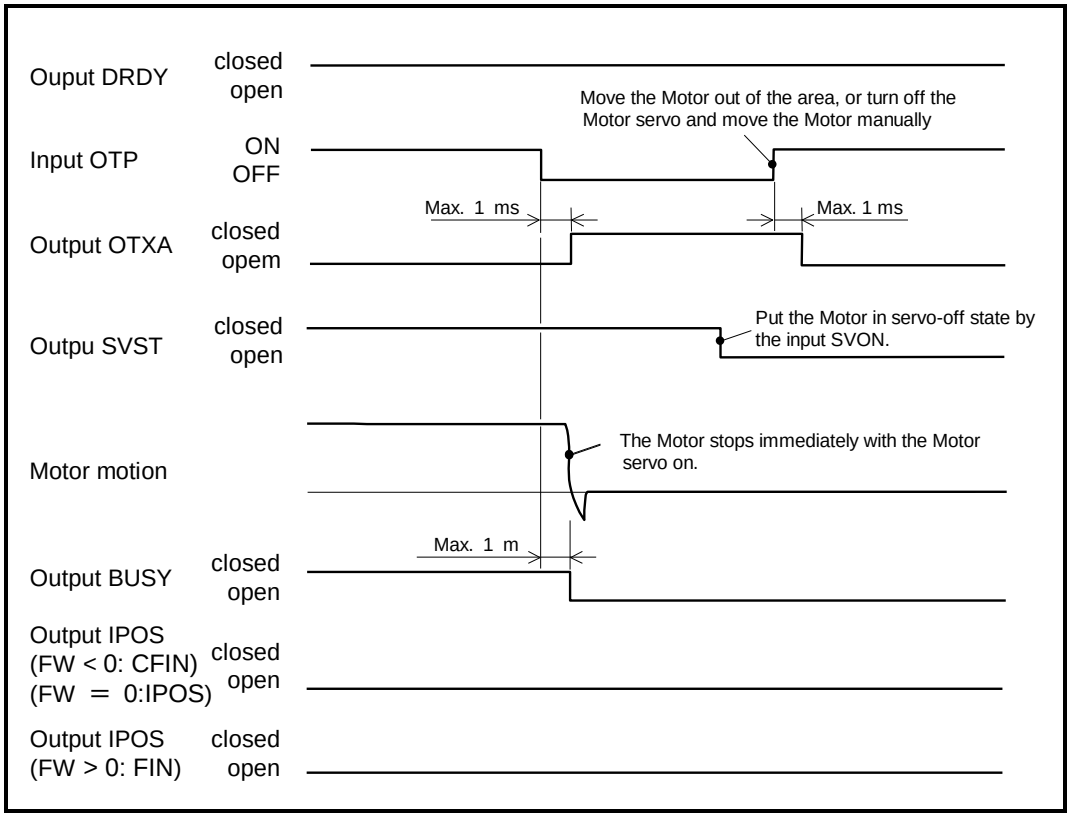

- When a travel limit is detected in the middle of operation, the Motor stops before it reaches the target position. Thus, the output IPOS (In-position) does not close.

- When the travel limit is detected while the Motor is stopping, the output IPOS does not change because the System maintains the position at where the last positioning was completed.

8.3.4. Output Normal: NRM

- Reports that the Driver Unit is in normal condition.
- When this output opens, an alarm or a warning occurs.

Table 8-24: Signal logic of the output NRM

Logic	Description.
Open	Occurrence of an alarm or warning.
Closed	Normal

- The signal timing of the alarms and warnings is the same as those of the output DRDY (Driver Unit ready) and the output WRN (Warning). Refer to "11. Alarm and Warning" for details.

8.3.5. Home Return Completed: HOME

- This output reports that Home Return operation is completed and the Motor is on the Home position.
- It can be used for the completion signal of the input HOS (Home Return start).

Table 8-25: Signal logic of the HOME output

Logic	Description
Open	Home Return unfinished or the commanded position is not the Home position.
Closed	Home Return is completed and the current commanded position is the Home position.

- The completion of Home Return operation reports the following.
  - ◊ The commanded position is denotes the sum of the current position and the position error.
- When the commanded position becomes other than 0 (zero), this output opens and does not close until the completion of next Home Return operation.
- Refer to "8.8. Home Return" for the signal timing of the output HOME.

8.3.6. Home Position Defined: HCMP

- This output reports that the Home position of position scale is defined.

◊Since this system has the embedded absolute sensor, this output is closed after the power is turned on.

Table 8-26: Signal logic of the output HCMP

Logic	Description
Open	Home position undefined
Close	Home position defined

- The following alarms make the Home position undefined.
  - ◊ Also, interruption of Home Return operation makes the Home position undefined.

Table 8-27: Alarm that makes the Home position undefined

7 segments LED	Command TA (Tell alarm)	Description	Motor condition
A0	**A0>Position Sensor Error**	Error in the position sensor	Servo off
A1	**A1>Absolute Position Error**	Error in absolute position data	
A4	**A4>Over Speed**	Excessive velocity	

- Refer to "8.8. Home Return" for the signal timing of the output HCMP.

8.4. Teaching

- You may directly set the current position data to the data, which must be an absolute value, of parameters and positioning commands. This function is called teaching.

- The parameters that can be used for teaching are listed on Table 8-28 below.

Table 8-28: Parameter and positioning command for which 'teaching' is available.

Category	Name (code)	function	Initial setting	Data range	Unit
Parameter	★OTP/ST	Software over travel limit, + direction	0	0 to 2 621 439	pulse
	★OTM/ST	Software over travel limit, – direction	0		
	★HO/ST	Offset, Home position	0	0 to ± 2 621 440 00	
	ZAS/ST	Start point of zone A	0	0 to 2 621 439	
	ZAE/ST	End point of zone A	0		
	ZBS/ST	Start point of zone B	0		
	ZBE/ST	End point of zone B	0		
	ZCS/ST	Start zone C	0		
	ZCE/ST	End point of C	0		
Positioning command used for programming	AR/ST	Positioning operation in units of absolute pulse (Short cut)	–	0 to 2 621 439	pulse
	AR/PL/ST	Positioning operation in units of absolute pulse (+ direction) (Example: AR100000/PL)	–		
	AR/MI/ST	Positioning operation in units of absolute pulse (– direction) (Example: AR100000/MI)	–		
	AD/ST	Positioning operation in units of absolute angle (Short cut)	–	0 to 35 999	0.01°
	AD/PL/ST	Positioning operation in units of absolute angle (+ direction) (Example: AD9000/PL)	–		
	AD/MI/ST	Positioning operation in units of absolute angle (– direction) (Example: AD9000/MI)	–		

★: Requires the password.

8.4.1. Preparation for Teaching

- Before performing the teaching, you may need to rotate the Motor manually. In such a case, you need to cancel the function of dynamic brake to prevent unexpected motion of the Motor, and not to apply unreasonable force for rotation.

- The following procedures deactivate the Motor servo and cancel the dynamic brake for easy rotation of the Motor.

  1) Turn off the main power to the Driver Unit.

  2) Input the command MO (Motor off).

  Thus the Motor servo does not activate by an input of the SVON (Servo on)

  3) Input the command KB (Kill brake)
  Input KB1 to cancel the brake.

  Thus the resistance force (dynamic brake) for manual rotation of the Motor is removed.

  ◊ Input "KB0 [ENT]," and "SV [ENT]" to return to the original state.

8.4.2. Teaching of Parameter

- Set the current position to a parameter data.

- For example, let's set the travel limit.

  1) Turn off the main power of the Driver Unit.

  2) Move the Motor to the position to be the position of plus side travel limit.

  3) Then teach the current position to the Driver Unit as the position of plus side travel limit.
  Input **[Parameter code]** + **[/ST]**.
  (The parameter OTP requires an entry of the password.)

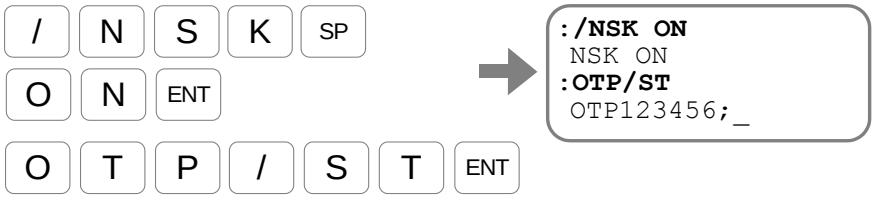

  The parameter OTP is set by teaching.
  Input the [SP] key to display the prompt "colon (:)" on the bottom line.

8.4.3. Teaching the Position Data of Positioning Program

- During channel editing in RS-232C communication, the current position is acquired as the coordinates of the absolute positioning command. Please note that the teaching function of the position data coordinates in a channel can not be used when editing a program by USB communication.

- Following example describes how to program the command to move the Motor to the current position with a rotation in the plus direction.
  The command is "AR/PL" for the absolute positioning in the plus direction with units of pulse.

1) Start the program editing with the command CH (Edit channel).

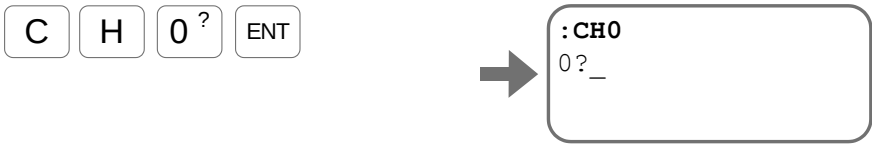

2) Following the prompt (line number and "?"), input the teaching command for the positioning command.
   Input as
   Command name (including option) + **/ST**.

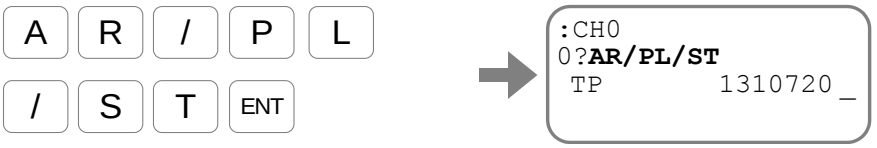

   The System displays the current position data.

3) An input of the SP key sets the current position to the target position of the positioning. For cancellation of the setting, input the BS key.

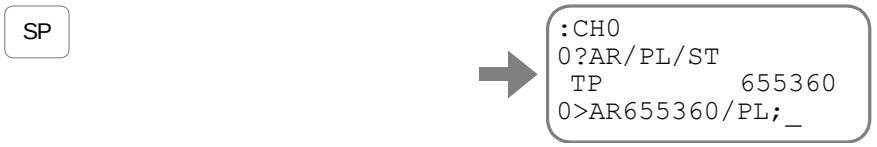

   The System displays the contents of the program.
   Input the SP key to display the prompt ("line number and "?").

8.5. Tuning

8.5.1. Servo Block Diagram

- The figure below illustrates the servo block diagram of the Driver Unit Model EDD.

Fig 8-11: Servo block diagram

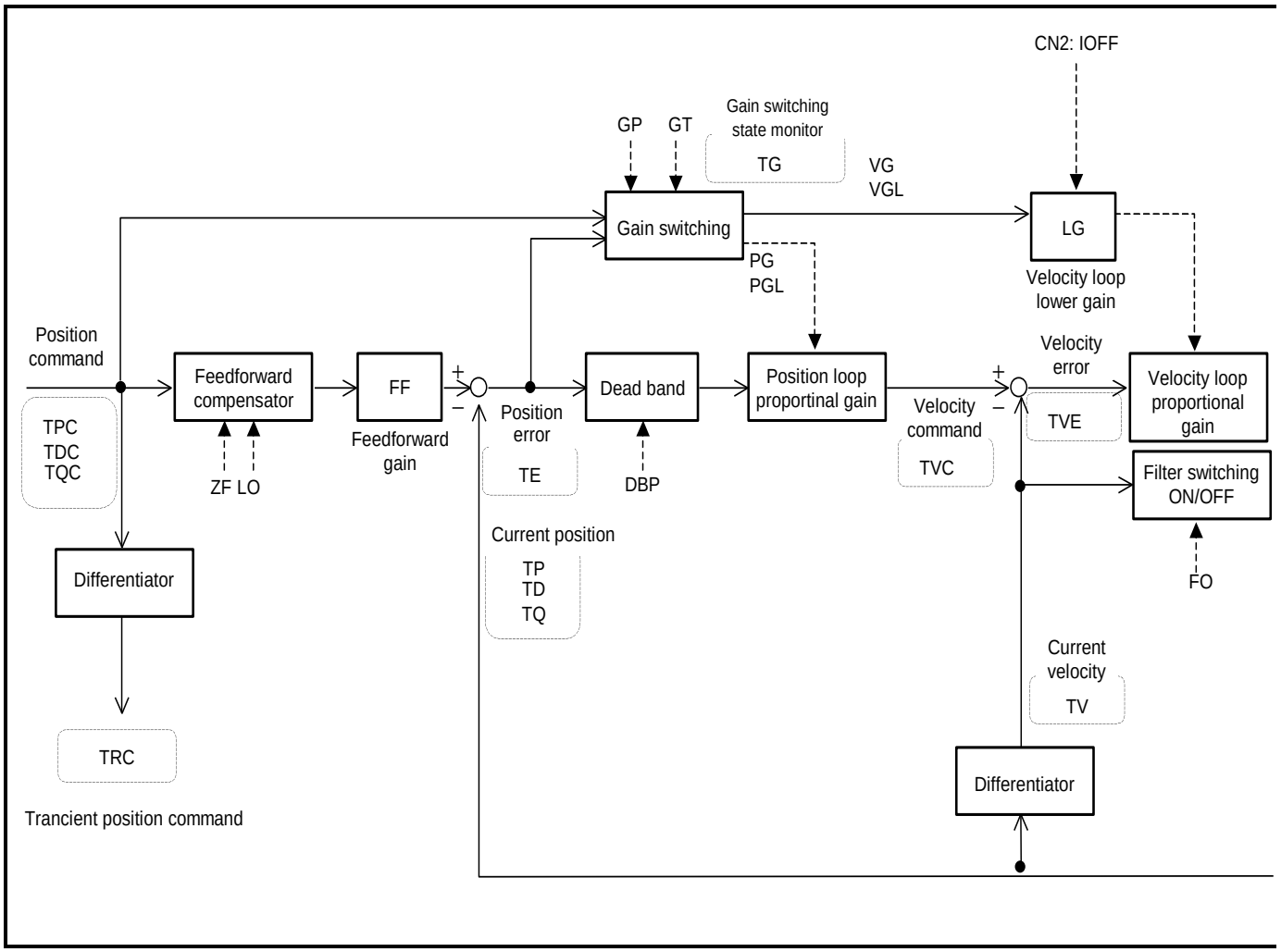

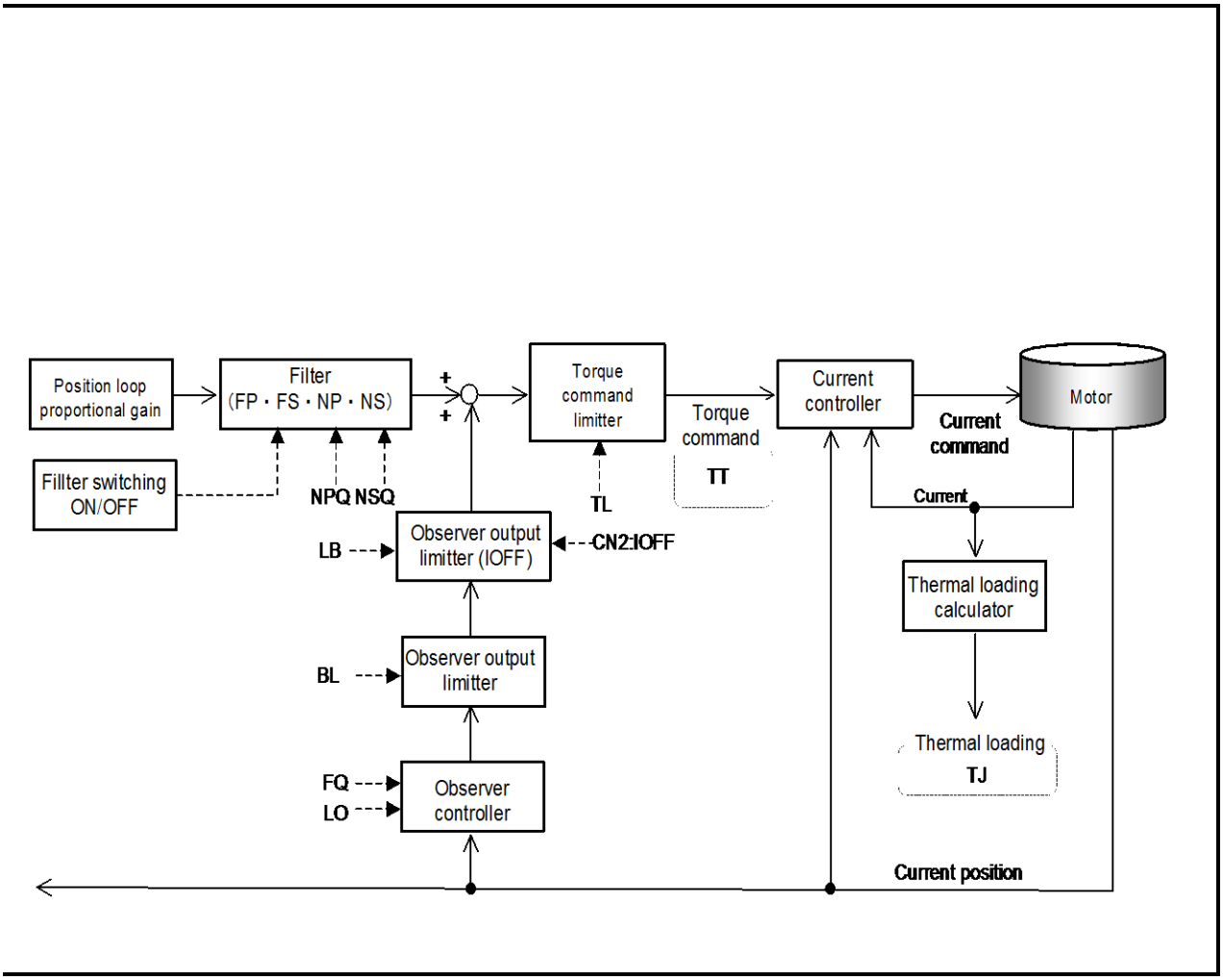
Position loop proportional gain
Filter (FP・FS・NP・NS)
+
+
Torque command limitter
Torque command
TT
Current controller
Motor
Current command
Current
Fillter switching ON/OFF
NPQ NSQ
TL
LB
Observer output limitter (IOFF)
CN2:IOFF
Thermal loading calculator
BL
Observer output limitter
Thermal loading
TJ
FQ
LO
Observer controller
Current position

8.5.2. Digital Filter

⚠ *Caution : Use of multi-stage filters may cause the velocity loop to be out of phase, and it may cause unstable Motor operation.*

⚠ *Caution : Do not use three or more filters. If the filter frequency is too low, hunting may occur. It is recommended to set the filter frequency greater than 100 [Hz].*

- The digital filter filters the torque command, which is the output of velocity loop. There are two kinds of filter: the low-pass filter and notch filter.
- Te digital filters are used for reducing in resonant noise and vibration.

Table 8-29: List of digital filter

Name (code)	Function	Initial setting	Data range	Unit
FP	Primary low-pass filter	0	0: Filter off 10 to 1 000	- Hz
FS	Secondary low-pass filter	0	0: Filter off 10 to 1 000	- Hz
NP	Primary notch filter	0	0: Filter off 40 to 1 000	- Hz
NPQ	Primary notch filter, Q parameter	0.25	0.10 to 5.00	-
NS	Secondary notch filter	0	0: Filter off 40 to 1 000	- Hz
NSQ	Secondary notch filter, Q parameter	0.25	0.10 to 5.00	-

- Refer to “9. Details of Commands and Parameters” for details of parameters.
- The figure below shows the change in the characteristics of notch filter by the parameters NPQ and NSQ (Notch filter, primary Q parameter)
  - ◊ The smaller the notch filter Q is, the wider frequency control is possible, centering around the frequency set by the notch filter.

Fig 8-12: Characteristics of notch filter

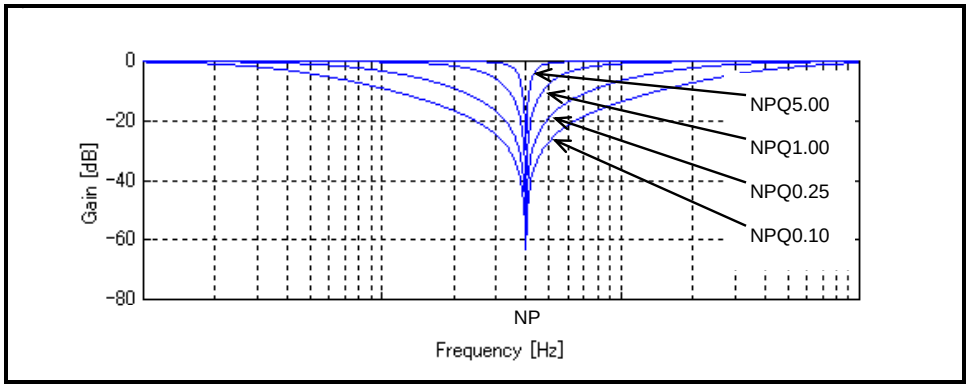

8.5.3. Position Loop Dead Band

- The parameter DBP is used to specify a dead band for the deviation of position loop. The deviation will be zeroed when it is under the set data of the parameter DBP.

- The dead band eliminates problems of positioning instability right after completion of positioning.

Table 8-30: Position loop dead band: DBP

Parameter	Function	Initial setting	Data range	Unit
★ DBP	Sets a dead band to the position loop.	0	0 to 4 095	0.5 [pulse]

★: Require an entry of the password.

- The parameter DBP specifies a dead band on the position loop deviation in both sides of 0 (zero) and zeroes the deviation that is under the DBP setting.

- In some use conditions, slight vibration may occur due minute deviation. Provision of the dead band eliminates such slight vibration.

  ◊ If a dead band is specified, the repeatability of positioning accuracy will be deteriorated by the amount of the dead band though the slight vibration may be eliminated.

- The unit of the dead band is a half of pulse count.
  (Corresponds to a half of the resolution of position sensor. Refer to “2.7. Driver Unit Specifications” for the resolution of position sensor.)

8.5.4. Automatic Gain Switching

- Automatic gain switching function is to change over the servo gain for operation to the servo gain for stopping, depending on the position deviation.

- The parameters PG and VG (gains for operation), and the PGL and VGL (gains for stopping) are used to switch the servo gain. There are two use examples as follow depending on tuned condition.

  1) For control of vibration at stopping by lowering the gain when the gain for operation cannot be increased because of low dynamic rigidity of the work attached to the Motor.

  2) Set lower gain for operation and higher gain for stopping to control vibration when operating and for short settling time when stopping

Table 8-31: Parameter related to gain switching function

Category	Name (code)	Function	Initial setting	Data range	Unit
Para meter	GP	Threshold to switch gain	0	0: Switch gain off. 1 to 2 621 439	– pulse
	GT	Timer for gain switching	0.0	0.0 to 10 000.0	ms
	PG	Position loop proportional gain	0.05	0.01 to 10.00	–
	VG	Velocity loop proportional gain	0.50	0.10 to 255.00	–
	PGL	Position loop proportional gain for stopping	0.05	0.01 to 10.00	–
	VGL	Velocity loop proportional gain for stopping	0.50	0.10 to 255.00	–
Monitor	TG	Monitor of gain switching state	–	0: Stopping gain (PGL and VGL) 1: Gain for operation (PG and VG)	–

- The gain switching function is not available when the parameter GP is set to GP0. In such case, the parameters for operation PG and VG is always effective.

- If setting of the parameter GP is other than 0, the gains PG and VG are used for operating the Motor. When the Motor stopped and the position error falls below the setting of parameter GP, the gains PGL and VGL for stopping are used.

- If the parameter GT (Switching gain timer) is set, the gain will be switched to the stopping gain after confirming that the position error stays below the setting of GP longer than a time set by the GT.

Fig 8-13: Functioning timing of gain switching

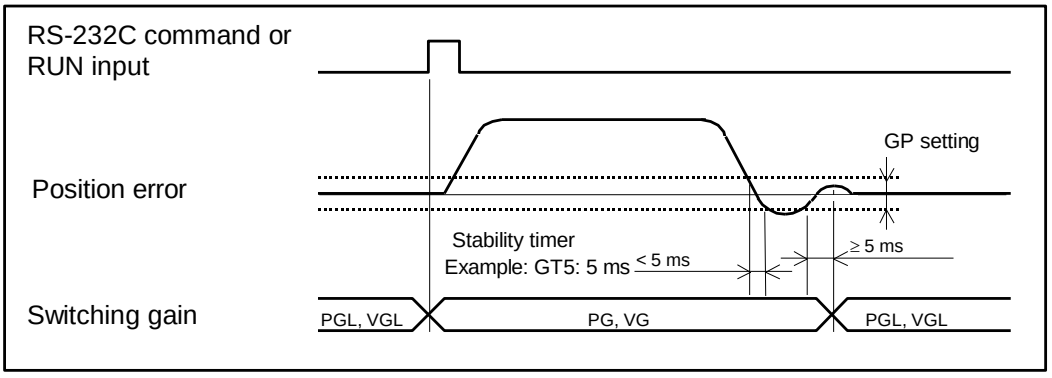

◊ The gains PG and VG are forcibly used when the internal pulses are being generated for the program positioning or the RS-232C command positioning; or when the pulse train command is being inputted.

◊ In case of a positioning with external pulse train command, the System regards it as no pulse input if the inputting pulse frequency falls under 10 [kpps], thus causing frequent gain switching. In such a case, setting the parameter GT controls frequent gain switching.

8.6. Positioning Operation

8.6.1. Acceleration Profiling and Individual Acceleration Setting

- The Driver Unit Model EDD has the function for acceleration profiling and individual setting of acceleration and deceleration.
  - ◊ These functions are available for the positioning operation, jogging operation and Home Return operation.
- Utilize these functions according to operation velocity and load conditions.

Table 8-32: Parameter related to acceleration profiling

Parameter (code)	Name/Function	Initial setting	Data range	Unit
MA	Move acceleration • Sets acceleration	1.0	0.1 to 800.0	s^{-2}
MB	Move deceleration • Sets deceleration.	0.0	0.0: Same as MA. 0.1 to 800.0	
JA	Jog acceleration • Sets jogging acceleration.	1.0	0.1 to 800.0	s^{-2}
JB	Jog deceleration • Sets jogging deceleration.	0.0	0.0: Same as JA. 0.1 to 800.0	
HA	Home return acceleration • Sets Home Return acceleration	1.0	0.1 to 800.0	s^{-2}
HB	Home return deceleration • Sets home Return deceleration.	0.0	0.0: Same as HA. 0.1 to 800.0	
CSA	Acceleration pattern select • Selects a pattern of acceleration profiling.	1	0: Same as CSA. (For CSB only) 1: Constant acceleration 2: Modified sine 3: modified trapezoid 4: Cycloid 5: Half sine	
CSB	Deceleration pattern select • Selects a pattern of deceleration profiling.	0		

- The parameters CSA (Acceleration pattern select) and CSB (Deceleration pattern select) set the acceleration profiling. Table 8-33 in the next page describes the availability of acceleration profiling.
- When setting CSB0 to the parameter CSB, the deceleration profiling will be the same as that of acceleration.
- Acceleration and deceleration specified by the parameters MA and MB denote average acceleration and deceleration respectively.

Table 8-33: Selection of acceleration profiling by the parameters CSA and CSB

Parameter	Name of profile	Acceleration profile	Features
CSA1 (CSB1)	Constant acceleration	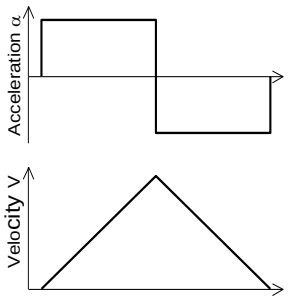	• Constant acceleration. • High vibration even the acceleration α is the lowest among the profiles
CSA2 (CSB2)	Modified sine	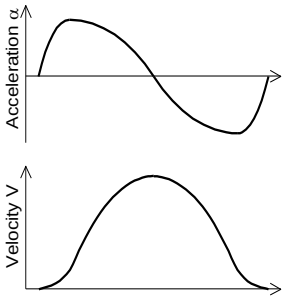	• Suits for high speed and heavy load application. • The maximum (V ×α) is low.
CSA3 (CSB3)	Modified trapezoid	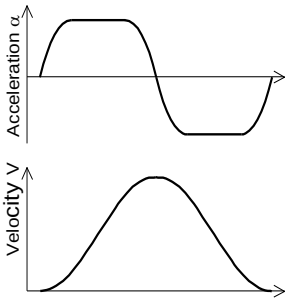	• Suits for high speed and light load application. • The maximum acceleration is low.
CSA4 (CSB4)	Cycloid	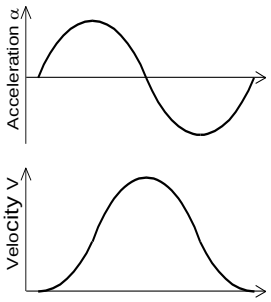	• Suits for right load application. • Low vibration
CSA5 (CSB5)	Half sine	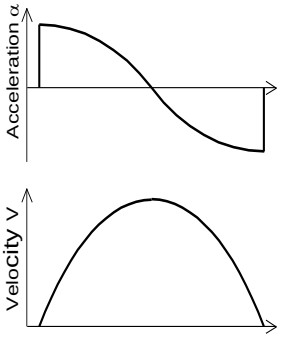	• Suits for high speed and right load application. • The maximum speed is low but high vibration.

8.6.2. Examples of Acceleration Profiling and Individual Setting of Acceleration and Deceleration

- Let's set acceleration and deceleration individually to the positioning command as shown in the figure below.

  ◊ The duration of constant velocity may be added depending on the total rotation angle.

Fig 8-14: Example of acceleration profiling and setting of acceleration/deceleration

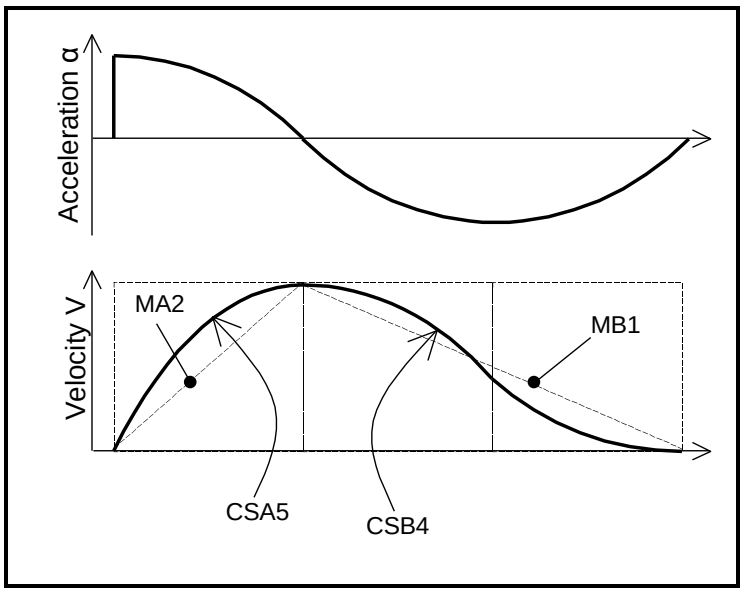

1) Specify an acceleration profile. For example, set the half sine profile for acceleration and the cycloid pattern for deceleration.

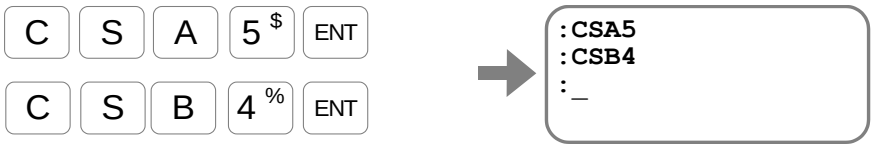

◊ The profile of deceleration will be the half sine as same as that of acceleration when the parameter CSB is set to CB0.

2) Set the acceleration and deceleration. Set the acceleration to 2 [s^{-2}] and the deceleration to 1 [s^{-2}]. (At the first setting, set a gentler acceleration and deceleration than usual setting.)

◊ The deceleration will be 2 [s^{-2}] as same as the acceleration when the parameter MB is set to MB0.

8.6.3. Shorter Way Positioning

- Shorter way positioning is a function to move the Motor in the shorter way from the current position to the target position.
  - ◊ For example, the Driver Unit performs the shorter way positioning when the positioning with the command of "AD24000" without any option is inputted.
- The function of shorter way positioning includes recognition of the software over travel limit zone.
  - ◊ The Motor rotates in the direction not to enter the off-limits area if it exists in the direction of shorter way positioning.

Fig 8-15: Example of shorter way positioning

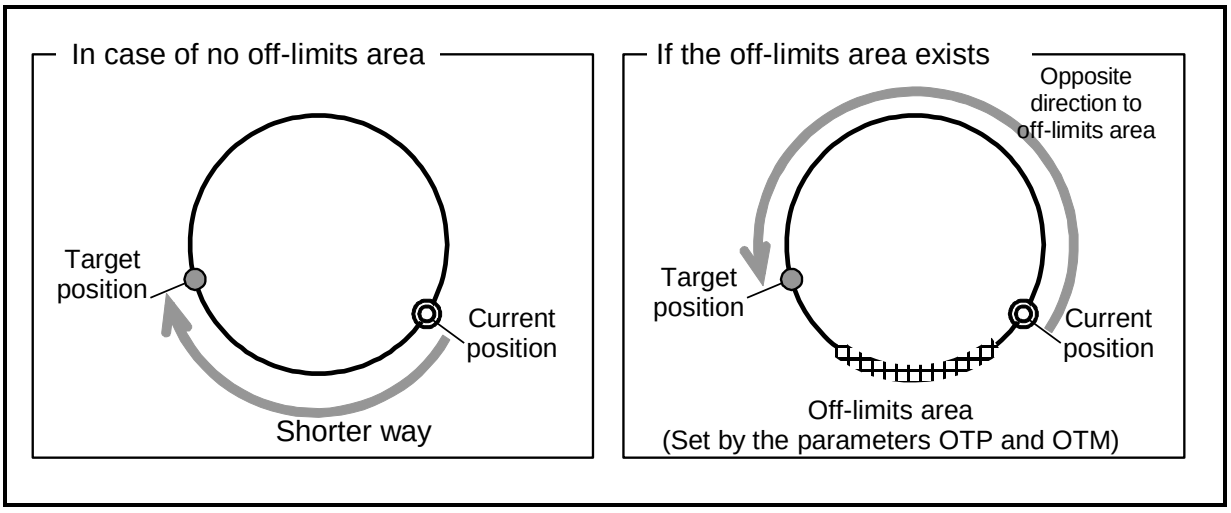

- The function of shorter way positioning is available for the absolute positioning commands shown in the table below.

Table 8-34: Absolute positioning command

Command	Function	Initial setting	Data range	Unit
AR	Absolute positioning in units of pulse (Shorter way)	–	0 to 2 621 439	pulse
AR/PL	Absolute positioning in units of pulse ([+ direction] [Example:AR100000/PL])	–	0 to 2 621 439	
AR/MI	Absolute positioning in units of pulse ([– direction] [Example:AR100000/MI])	–	0 to 2 621 439	
AD	Absolute positioning in units of degree (Shorter way)	–	0 to 35 999	0.01°
AD/PL	Absolute positioning in units of degree ([+ direction] [Example:AD9000/PL])	–	0 to 35 999	
AD/MI	Absolute positioning in units of degree ([– direction] [example: AD9000/MI])	–	0 to 35 999	
AQ	Absolute positioning with user scale (Shorter way)	–	0 to QR-1	360°/parameter QR
AQ/PL	Absolute positioning with user scale ([+ direction] [Example: AQ180000/PL])	–	0 to QR-1	
AQ/MI	Absolute positioning with user scale ([– direction] [Example: AQ180000/MI])	–	0 to QR-1	

- If the function of shorter way positioning is not required, you can set the rotational direction to each positioning command.
  - ◊ The Motor rotation is in the plus direction if "/PL" is specified such as "AD24000/PL."
  - ◊ The Motor rotation is in the minus direction if "/MI" such as "AD24000/MI."

Fig 8-16: Positioning with specified rotational direction

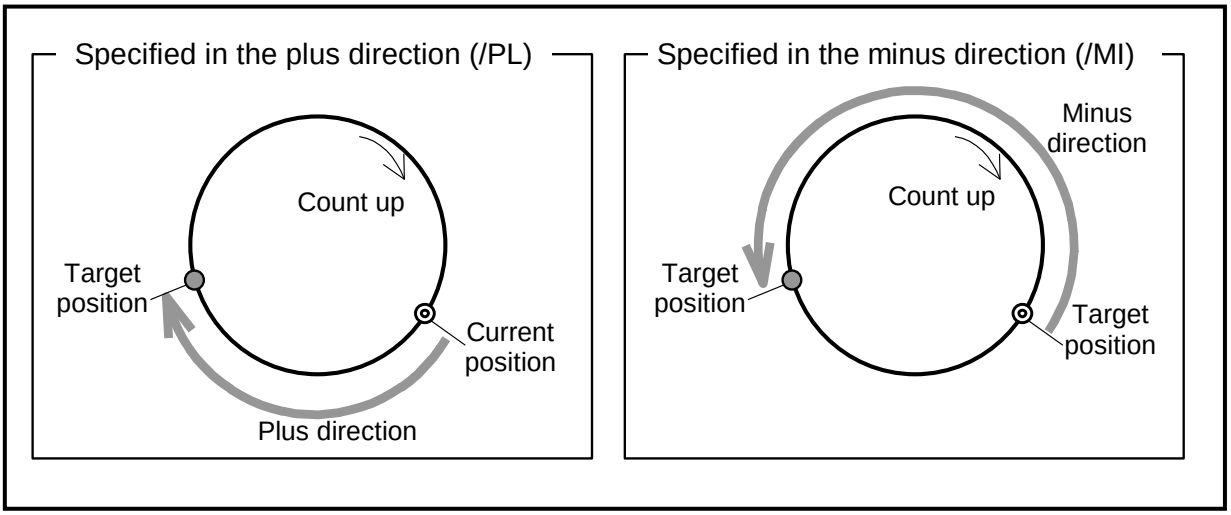

8.6.4. User Scale Positioning

- The dividing number of entire circumference of Motor rotation can be set to the unit of positioning command. Thus, the following positioning can be easily performed.
  - ◊ An index positioning in units of 90 angle degree (dividing number = 4)
  - ◊ A positioning in units of 1/1000 angle degree (dividing number = 360 000)
  - ◊ A positioning in units of the same circumference resolution of other Motor
- The parameter QR (Dividing number, user scale) specifies the dividing number of total circumference.
- The commands AQ and IQ (Positioning command, user scale) execute a positioning whose dividing number is specified by the parameter QR.
- Use the monitor TQ (Tell current position, QR unit) to read out the current position in units of dividing number.

Table 8-35: Command and parameter related to user scale positioning

Category	Name (code)	Function	Initial setting	Data range	Unit
Command	IQ	Incremental positioning with user scale	–	0 to ± QR×100	360°/parameter QR
	AQ	Absolute positioning with user scale (Shorter way)	–	0 to QR-1	
	AQ/PL	Absolute positioning with user scale ([+ direction] [Example: AQ180000/PL])	–	0 to QR-1	
	AQ/MI	Absolute positioning with user scale ([– direction] [Example: AQ180000/MI])	–	0 to QR-1	
Parameter	★QR	Dividing number for user scale positioning	360 000	1 to 2 621 440	Dividing number/ revolution
Monitor	TQ	Reads out the current position. (Unit: QR)	–	0 to QR 1	360°/parameter QR

★The password is required.

- For example, set the "QR4" for a positioning with units of 90-angle degree.
  - ◊ The figure below shows the circumference is equally divided into four grids based on the Home position. The positioning will be performed on these grids.

Fig 8-17: Dividing example of circumference

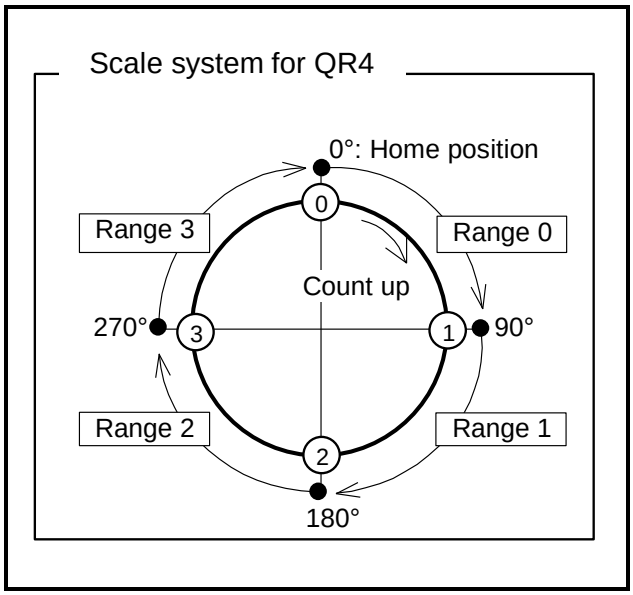

- The System will perform the positioning on this user scale
  - ◊ Set "AQ3" for a shorter way positioning to the grid on 270° [angle degree],
  - ◊ Execute the command "IQ1" for positioning from current position to 90° [angle degree] in the plus direction.

Fig 8-18: User scale positioning

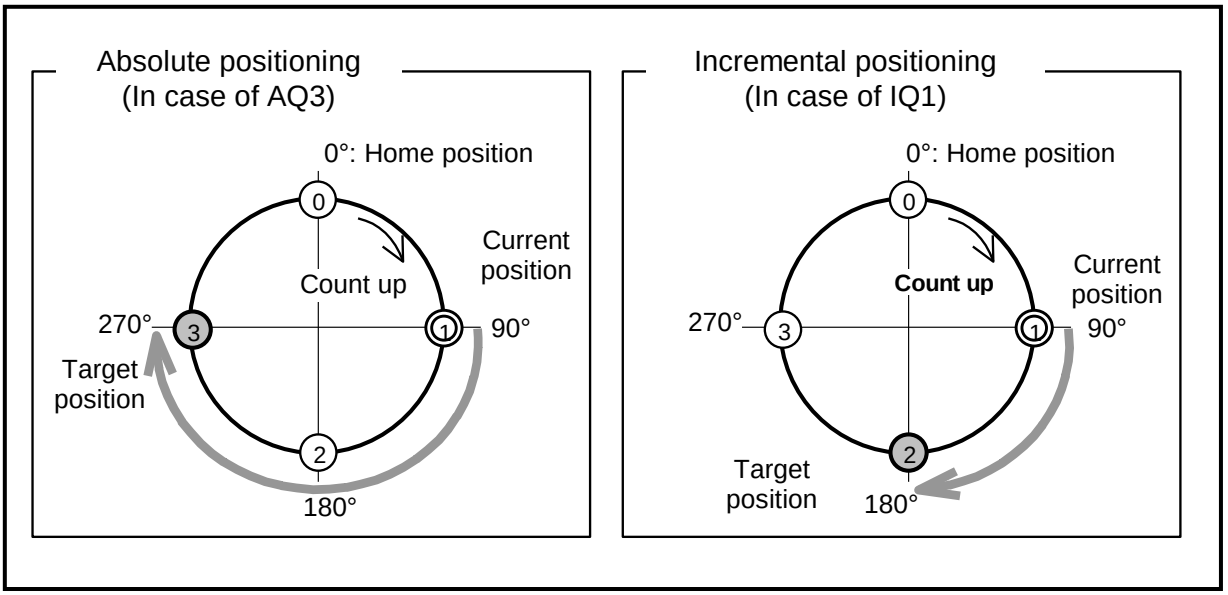

- For a positioning in units of 1/1000 [°], set as "QR360000 **.**"

◆ Getting back to a grid position.

- The current position is not necessarily on a grid specified by the parameter QR when the power is turned on or the Motor stops in an exceptional occasion because of an alarm or a warning.
- In such a case, you may position the Motor to the nearest grid by an execution of incremental user scale positioning.
- For example in the figure below, the current position is in the range of grid 1, but not on the grid 1.
  - ◊ Command IQ1
    If the command IQ1 is executed at this moment, the Motor moves to the grid 2. That is, the Motor moves to the first grid from the current position.
  - ◊ Execute the command IQ0 to move the Motor to the original grid position, which is the base point of the current position. That is, the Motor moves to the grid 1.

Fig 8-19: Getting back to a grid in the user scale positioning

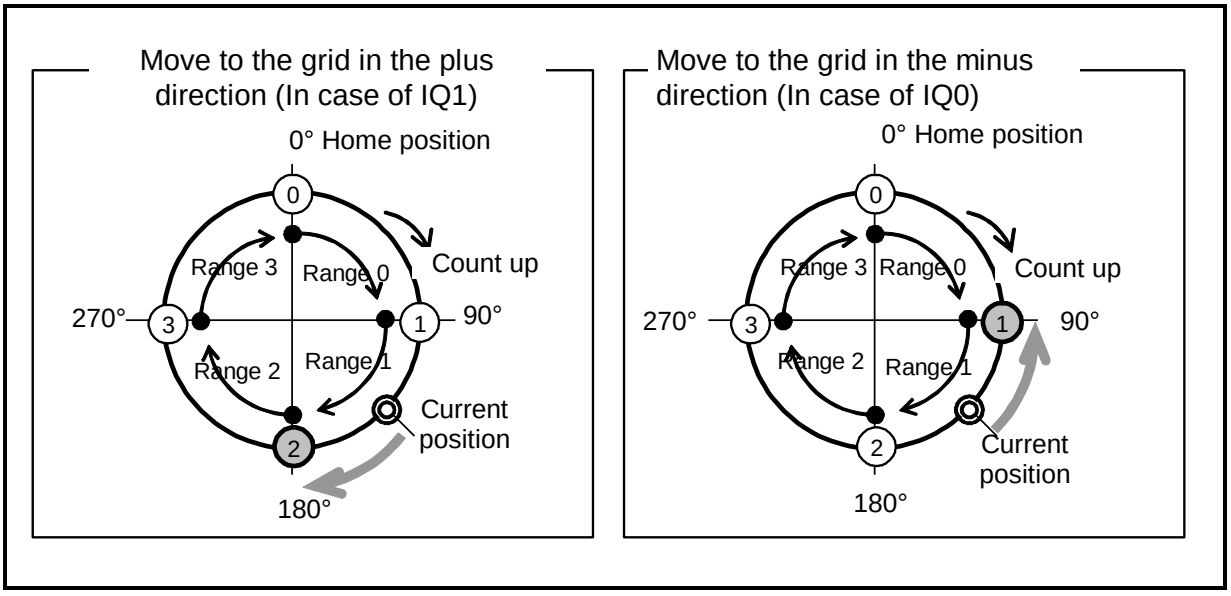

8.7. Program Operation

8.7.1. Change of Parameter via Program Operation

- Change of parameter in a program (local parameter) can be stored after completion of a program operation. (The Driver Unit will keep it until the control power is off.)
  - ◊ The parameter PK (Parameter keep) holds local parameter settings.
  - ◊ The command RE (Return) cancels the held local parameters and resets to the global parameter setting again.
- Thus the operating conditions can be changed by the next input of the RUN input (Program start).

Table 8-36: Input/output and command related to change of parameter via program operation

Category	Name (code)	Name/Function	Initial setting	Data range
Control input	RUN	Program start • Starts a program.	–	OFF → ON starts program operation
	PRG0 to 7	Internal program channel selection • Selects channel number.	–	Selects program channel by ON and OFF (Binary digit)
Parameter	PK	Parameter keep • Holds local parameter	0	0: Cancels local parameter at completion of program operation. 1: Holds local parameter after completion of program operation and maintains its effectiveness.
Command	RE	Restore global parameter • Cancels local parameter and restore the global setting	–	Cancels local parameter that has been held and makes global parameter effective until the next start of the program.

- The following describe an example for use three different ways in setting of gains and conditions for positioning completion depending on operation sequence: default, moving mounted load A, and mounted load B.

Fig 8-20: Example for using three different gain settings

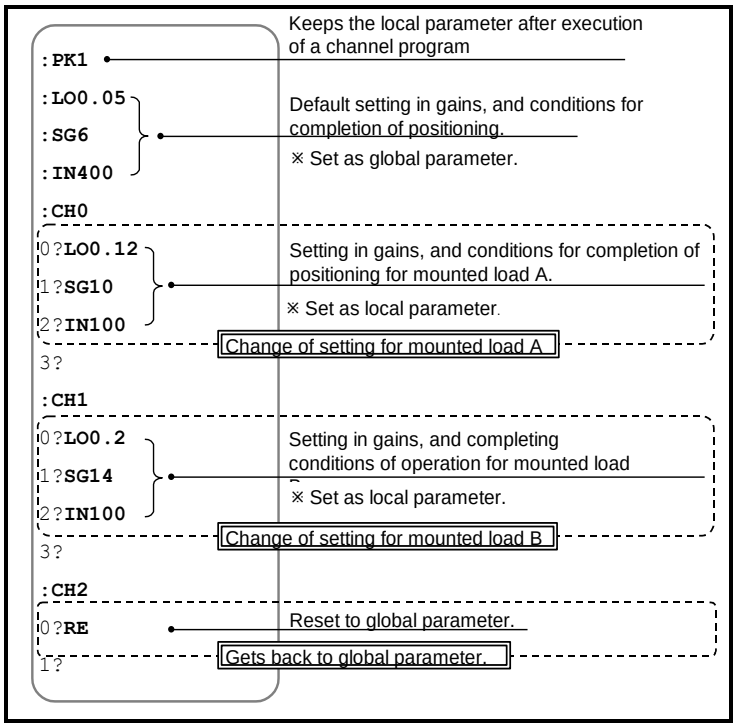

- The figure below illustrates signal timing for use of three different gain settings.

Fig 8-21: Signal timing for use of three different gain settings

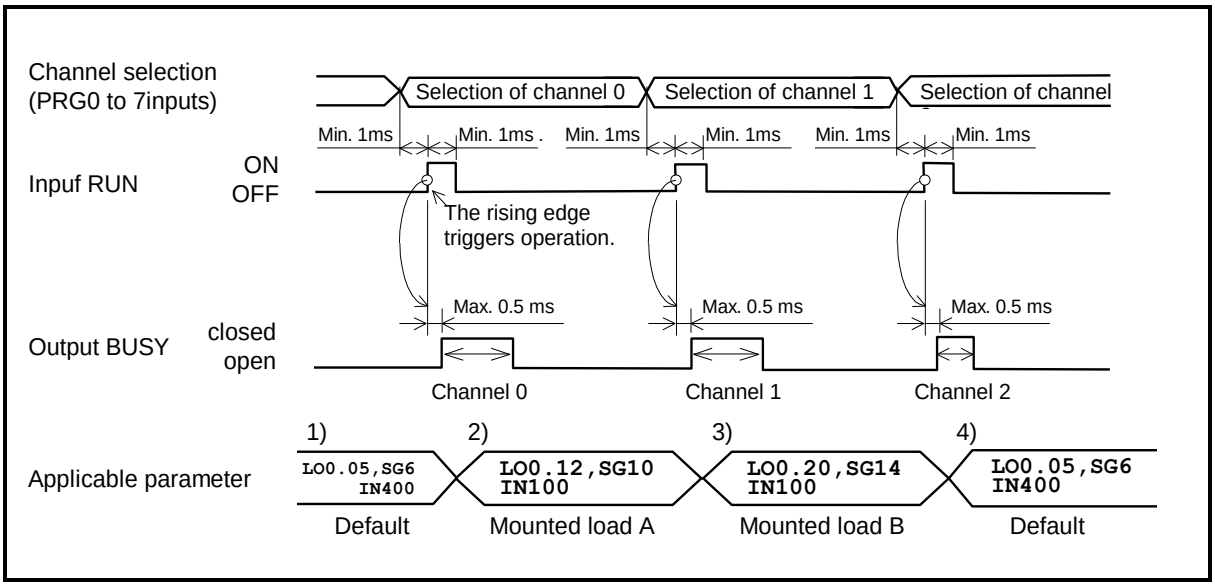

1) Before execution of channel program, the default setting (global parameter) is effective.

2) When program execution of channel 0 starts, the parameter for the mounted load A becomes effective.
At this moment, the parameter for the mounted load A remains effective after the program execution because the parameter PK (Parameter keep) is set to PK1.

3) When program execution of channel 1 starts, the parameter changes to that of the mounted load B.

4) The parameter RE (Return) is set to the program of channel 2.
Execution of channel 2 program resets to the default parameter cancelling the parameter for the mounted load B that has been effective.

- Approximately 0.1 ms is required for setting one parameter to a program channel.

  ◊ Chang of parameter setting which entails indirect changes of other parameters, such as between the parameter SG (servo gain) and parameters PG and VG, require the time for changing all settings. Thus, it takes approximately 0.3 [ms] for changing the setting of the parameter SG.

8.7.2. Automatic Program Execution at Power on

- You can automatically execute a program when the power is on.
  - ◊ This function is useful for the application that repeats positioning operation after the power is on.
- The parameter AE (Program auto execution) specifies the channel number whose program is to be executed.
- The following example states how to specify following positioning operation.

Specifications of Operation

Control input
Emergency stop: Activates when the EMST is OFF.
Operation start and hold: Holds the operation when the HLD is OFF.

Control output
Detection of System error: Error is detected when the NOR opens.
In-position: A positioning completes when the IPOS is closed.

Normal operation
1) Automatically turn the servo on and activate the input HLD at the power on.
2) Repeat a 90° step motion in CW direction from the scale home position.
3) Dwell time after completion of a step motion is one second.

Abnormal state
Reboot the main power for recovery from abnormal state.

- The table below lists the required functions to perform the operation specified above.

Table 8-37: Inputs/Outputs and parameters required for automatic execution of program after the power on

Category	Name (code)	Function	Initial setting	Range	Unit
Control input	EMST	Emergency stop	–	OFF: Emergency stop (Note*) ON: Normal (Note*)	–
	HLD	Operation hold	–	OFF: Normal ON: Hold	–
Control output	NRM	Reports normal state.	–	Open: Alarm or warning Closed: Normal	–
	IPOS	Reports completion of positioning.	–	Open: Positioning incomplete or the target position data is lost. Closed: Positioning completed and the target position is held.	–
Para-meter	★AE	Automatically starts a positioning	-1	–1: Automatic execution is off. 0 to 255	– channel
	★QR	Sets a dividing number to the circumference of the scale	360 000	1 to 2 621 440	Number/rev.
Command excusive for channel	IQ	Incremental positioning in user unit.	–	0 to ± QR × 100	360°/parameter QR
	TI	Sets dwell time. (Pauses operation for set time.).	–	0.1 to 10 000.0	ms
	JP	Jump	–	0 to 255	channel

★: Input of the password is required.

Note*: The signal logic is the normally closed at the initial setting.

Setting of control input and output

◆ Let's set signals for "Detection for error in the Motor System," "Start operation• Hold operation" and "Automatic servo on after the power on".

● Change the initial settings of the output NRM (Normal), the input HLD (Hold operation), and the input SVON (Servo on).

◊ The input SVON is not actually wired. However, its signal port has been set to the normally closed polarity so that the Motor servo activates automatically when the power is on.

Fig 8-22: How to set the output NRM, input HLD and input SVON

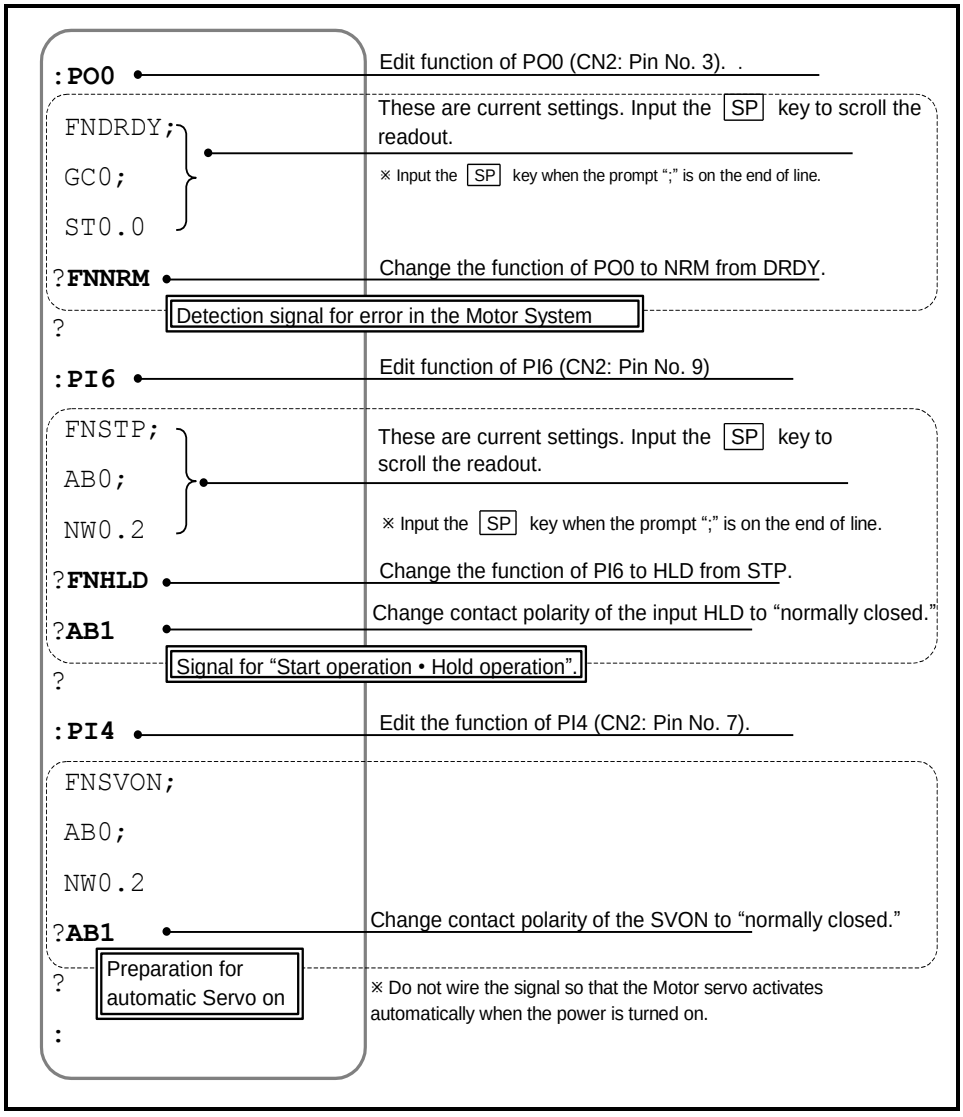

Setting parameters

◆ Edit the setting for easy execution of the 90° index positioning.

- Use the command IQ (Incremental positioning, user).
  The target position is the points that equally divide the circumferential scale into four. That is for an incremental step positioning of 90-angle degrees.
  Set the parameter QR to "QR4."

- Set the program channel 0 to automatically execute the program when the power is turned on.
  Set the parameter AE to "AE0."

Fig 8-23: Setting dividing number of the position scale

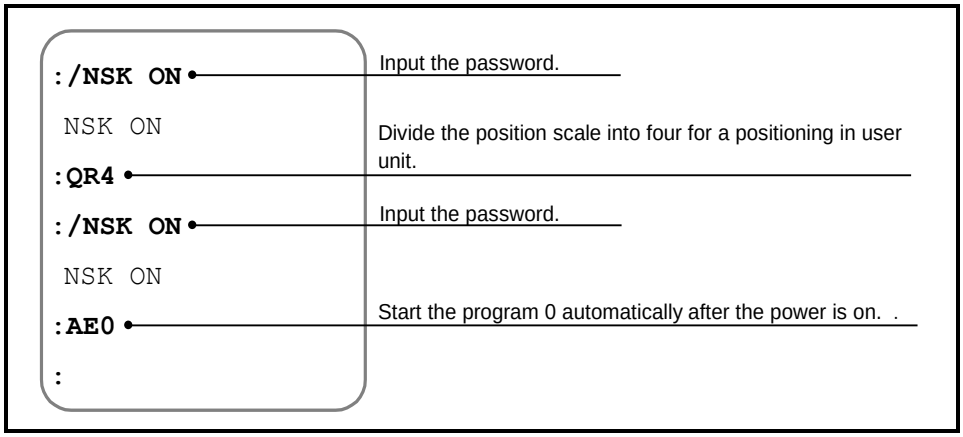

Edit the program

◆ Edit the program to repeat a positioning for 90 angle degrees.

- The program consists of two parts: the part that waits for activation of the Motor servo and the part that repeats a positioning for 90 angle degrees.

Fig 8-24: Edit the program

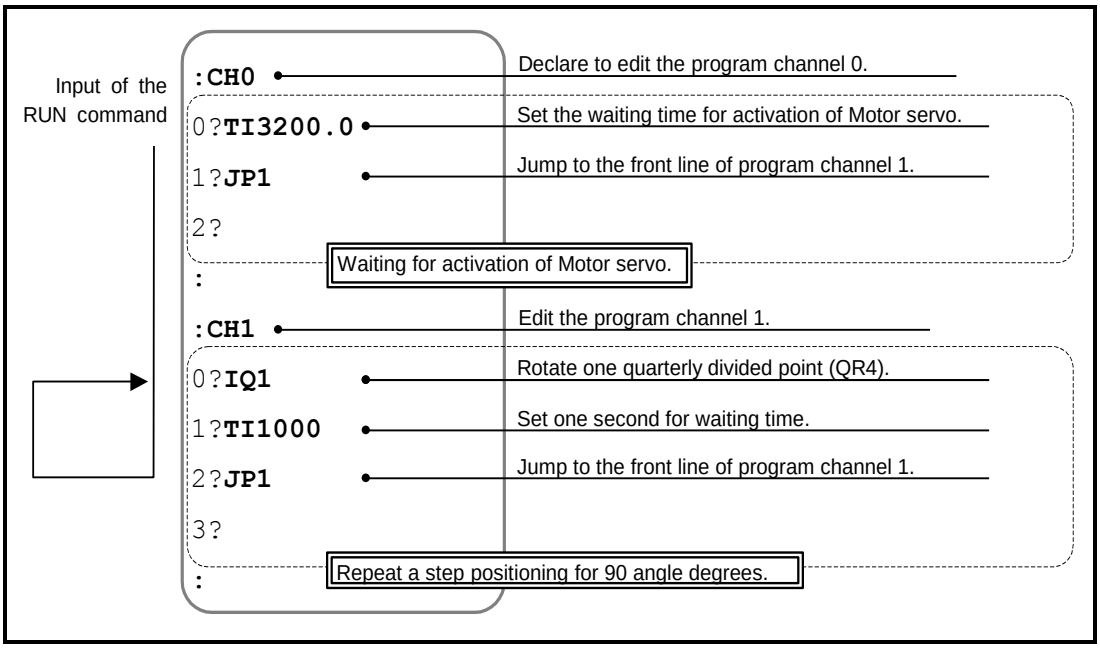

Signal timing

- The figure below illustrates signal timing of this positioning operation.

Fig 8-25: Signal timing for automatic program execution at the power-on.

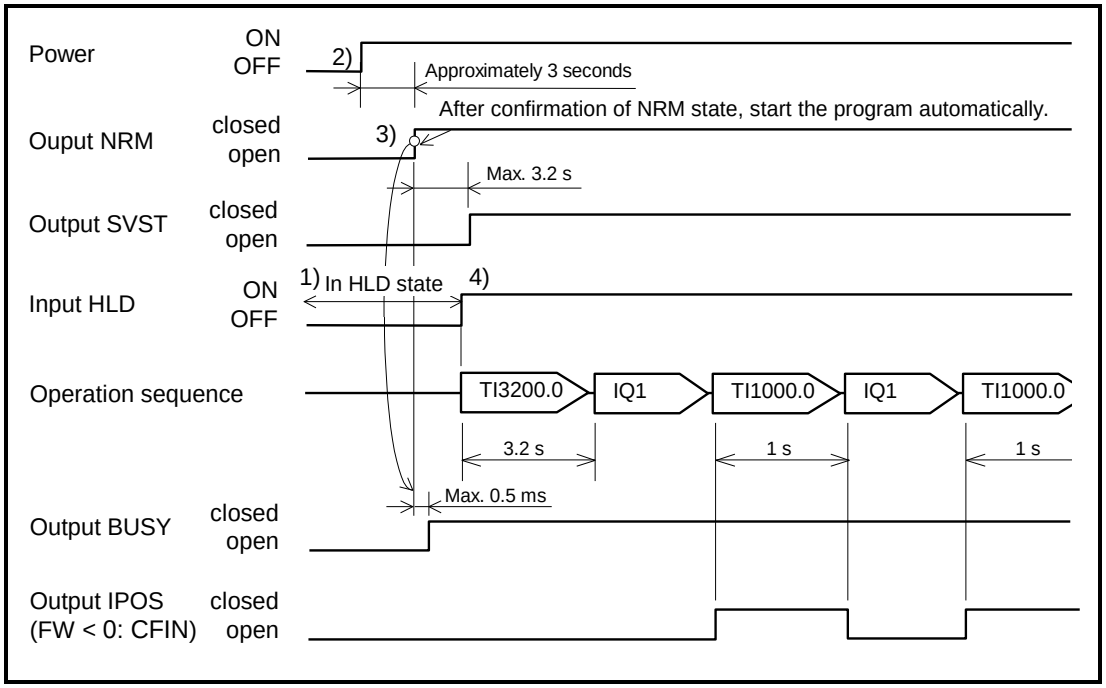

1) Confirm that the input HLD is OFF. (The input HLD is effective as the contact polarity is normally closed.)

2) Turn on the main and the control power.

3) When the time for initialization of the CPU elapses, the output NRM is settled and the channel program 0 starts automatically.
At this moment, the System is in the HOLD state, thus holding the execution of commands in the program. However the port of output BUSY (In-operation) is closed.

4) Activate the input HLD to cancel the holding state.
After waiting time of 3.2 seconds, the System repeats a motion of 90-angle degrees with one second pausing time between.

- Turn the input HOLD off when temporally stopping the operation.

8.8. Home Return

- The PS/PN/PX series Megatorque Motor incorporates an absolute position sensor and holds the home position even the power is turned off. Thus, the Home Return operation is not necessary in normal operation. However, you can execute the Home Return operation triggered by an external sensor, when your machine system requires it.
- The Home Return operation is to move the Motor to the home position, which is inputted to the Driver Unit by the signal of home position limit or by the signal of travel limit switch, and to define the position as the origin of position scale system.
  - ◊ Teaching of the home position sets any position as the home position without inputting the signal of limit switch.
- The table in this page lists commands and parameters exclusively used for the Home Return operation. Refer to "9. Details of Command and Parameter" for more details.
  - ◊ The functions of control inputs and outputs related to the Home Return operation are not set in the shipping set of the connector CN2 (Control input/output connector). Set the required functions to the signal ports.
  - ◊ Refer to "8.1. Assignment of Input/Output Function" for setting of control input/output.

Table 8-38: Inputs/outputs and parameters related to the Home Return operation

Category	Code	Function	Initial setting	Range	Unit
Control input	HOS	Home Return start • Starts the Home Return operation	–	Starts operation: OFF→ ON	–
	HLS	Home position limit	–	OFF: Not nearing to the home position ON: Nearing to the home position	–
Control output	HOME	Home Return complete • Reports completion of the Home Return	–	Open: Home Return not completed, or the commanded position is not the home position Closed: Home Return completed and the commanded position holds the home position.	–
	HCMP	Home position defined • Outputs for definition of the home position	–	Open: Home position not defined. Closed: Home position defined.	–
Command	HS	Home Return start • Starts the Home Return operation.	–	–	–
	HS/LS	Adjust of home position limit	–	–	–
Parameter	★OS	Origin setting mode • Specifies Home Return mode	6	1: Define the home position at where the Motor entered the ON area of the home position limit. 3. Define the home position at where the nearest phase Z signal is detected after the Motor passed the ON area of home position limit. 4: Define the home position at where the first phase Z signal is detected after entering the ON area of the home position sensor. 5: Define the home position at where the Motor entered ON area of the home position limit. 6: Set the current position as the home position. The Motor does not move. 7: Set the home position at where the first phase Z signal is detected when the Motor reverse the motion after it entered the area of home position sensor.	
	★HD	Home Return direction • Sets direction of Home Return.	1	0: Plus direction 1: Minus direction	-
	★HO	Home offset • Offsets the home position.	0	0 to ± 262 144 000	pulse
	HV	Home Return velocity • Sets Home Return velocity.	0.200	0.001 to 10.000	s^{-1}
	HA	Home Return acceleration • Sets Home Return acceleration.	1.0	0.1 to 800.0	s^{-2}
	HB	Home Return deceleration • Sets Home Return deceleration.	0.0	0.0: Use HA. 0.1 to 800.0	
	HZ	Home Return near-zero velocity • Sets searching velocity for Home position.	0.010	0.001 to 0.200	s^{-1}
	CSA	Acceleration pattern select Sets an acceleration profiling. .	1	0: Use CSA. (CSB only) 1: Constant acceleration 2: Modified sine 3: Modified trapezoid 4: Cycloid 5: Half sine	
	CSB	Deceleration pattern select Sets a deceleration profiling. .	0		

★: Requires an entry of the password.

8.8.1. Home Return Operation via the Home Position Sensor

8.8.1.1. Home Return Mode: OS4

- The OS4 mode is to reverse the Motor position to the position of the nearest phase Z signal after detection of rising signal of the input HLS (Home position limit).
- The repeatability of the home position is assured regardless of the sensitivity of the home position limit because the position of the phase Z signal finally determines the home position.

Fig 8-26: Signal timing of Home Return Operation (In case of OS4, DI0 and HD1)

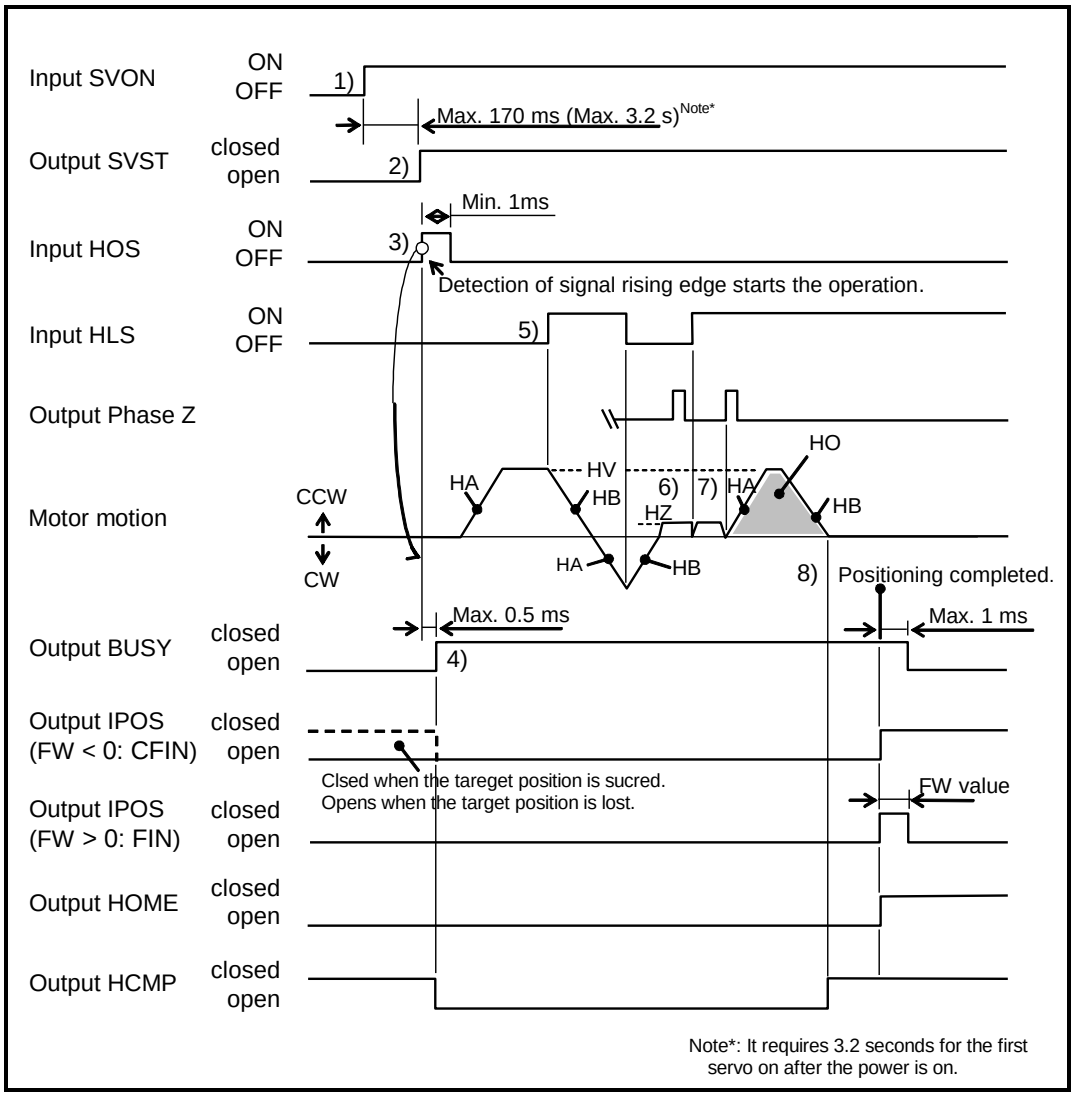

1) Turn ON the input SVON (Servo on) to activate the Motor servo.

2) The output SVST (Servo state) closes when the Motor servo activates.

3) Activation of the input HOS (Home Return start) from OFF to ON starts the Home Return operation.
The Motor starts in the direction set by the parameter HD (Home Return direction) that follows the current direction setting of scale system.
(The parameters are set to DI0 and HD1 in the above figure.)
The Motor rotates in accordance with the settings of parameter HA (Home Return acceleration), HB (Home Return deceleration) and HV (Home Return velocity).

4) The output BUSY (In-operation) is closed during execution of Home Return. The home position is in the state of undefined and the System forcibly opens the output HCMP (Home position defined).

5) When the HLS input changes from OFF to ON, the Motor decelerates and stops. Then it reverses to get out temporally the area of the home position limit.

6) The Motor reverses its motion again with the velocity set by the parameter HZ (Home Return near-zero velocity) and rotates until the input HLS changes from OFF to ON again.

7) After detecting the input HLS, the Motor rotates to the nearest phase Z signal. The Motor rotates further to the position set by the parameter HO (home position offset) and defines the home position. At this time, the output HCMP closes.

8) When the Motor settles at the home position, the outputs IPOS (In-position) and HOME (Home Return complete) close to complete the operation.

- If the Home Return operation is interrupted, the System cannot define the home position. Entering of the command for an absolute positioning at this state will cause the warning A5 (Origin undefined).

- You can program the command HS in a program channel. This will make you possible to start the Home Return operation with the inputs RUN (Start program) and PRG (Internal program channel selection).

- The pattern of Home Return operation depends on its starting point as illustrated below.

Fig 8-27: Operation pattern of Home Return (In case of OS4, DI0 andHD1)

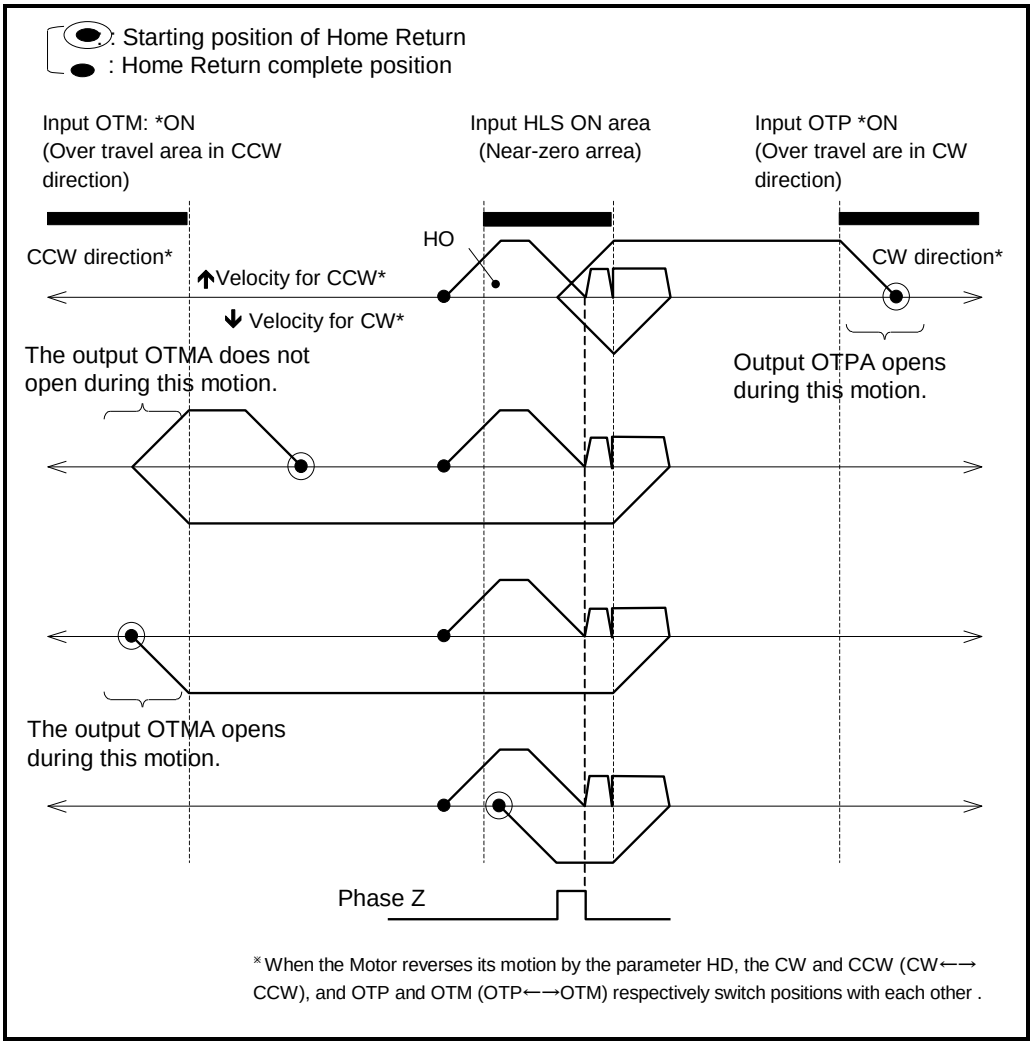

8.8.1.2. Home Return Mode: OS5

- The OS5 mode is to detect the rising edge of the input HLS (Home position limit).
- Repeatability of the home position depends on the sensitivity of the limit sensor in this mode.

Fig 8-28: Operation pattern of Home Return (In case of OS5, DI0 and HD1)

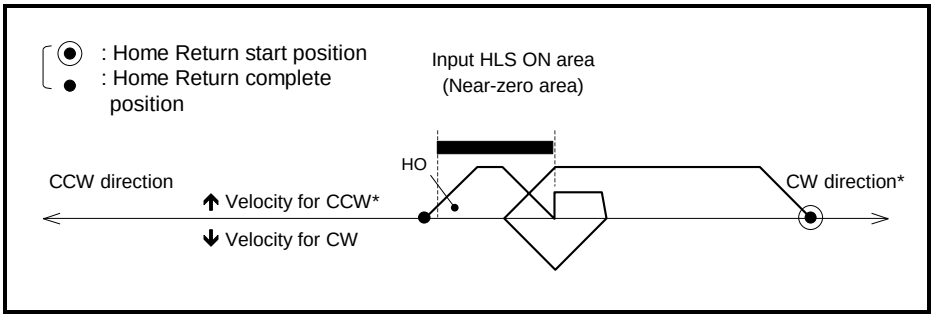

8.8.1.3. Home Return Mode: OS1

- The OS1 mode is to detect the signal rising edge of input HLS (Home position limit).
- Repeatability of the home position depends on the sensitivity of the limit sensor in this mode.

Fig 8-29: Pattern of Home Return Operation (In case of OS1, DI0 and HD1)

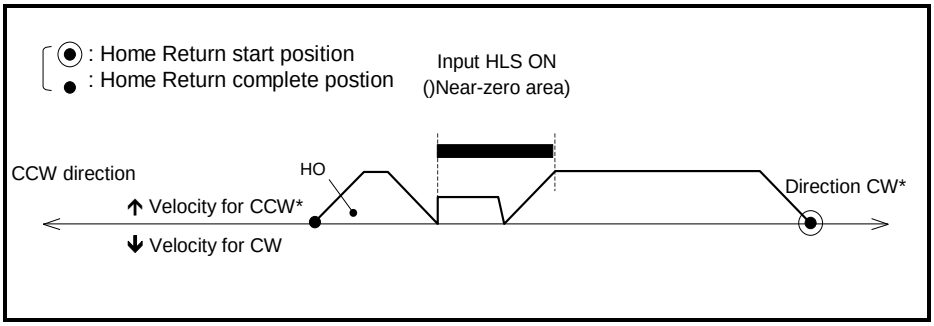

8.8.1.4. Home Return Mode: OS3

- The OS3 mode is to return to the position at the neared phase Z signal after detection of the signal rising edge of the input HLS.
- The home position is set at the position of phase Z signal, thus assuring repeatability of home position regardless of the sensitivity of the limit sensor.

Fig 8-30: Pattern of Home Return operation (Ion case of OS3, DI0 and HD1)

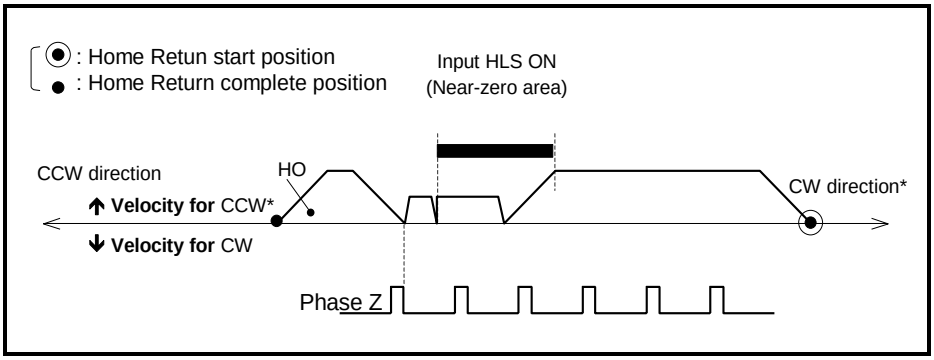

8.8.2. Home Return with Travel Limit

8.8.2.1. Home Return Mode: OS7

- The OS7 mode is to return to the position of the nearest phase Z after the Motor gets out the area of the input OTM (Travel limit, minus) or the input OTP (Travel limit, plus).
- The home position is set at the position of phase Z signal thus assuring repeatability of home position regardless of the sensitivity of the limit sensor.

Fig 8-31: Signal timing of Home Return operation (In case of OS7, DI0, HD1 and HO<0)

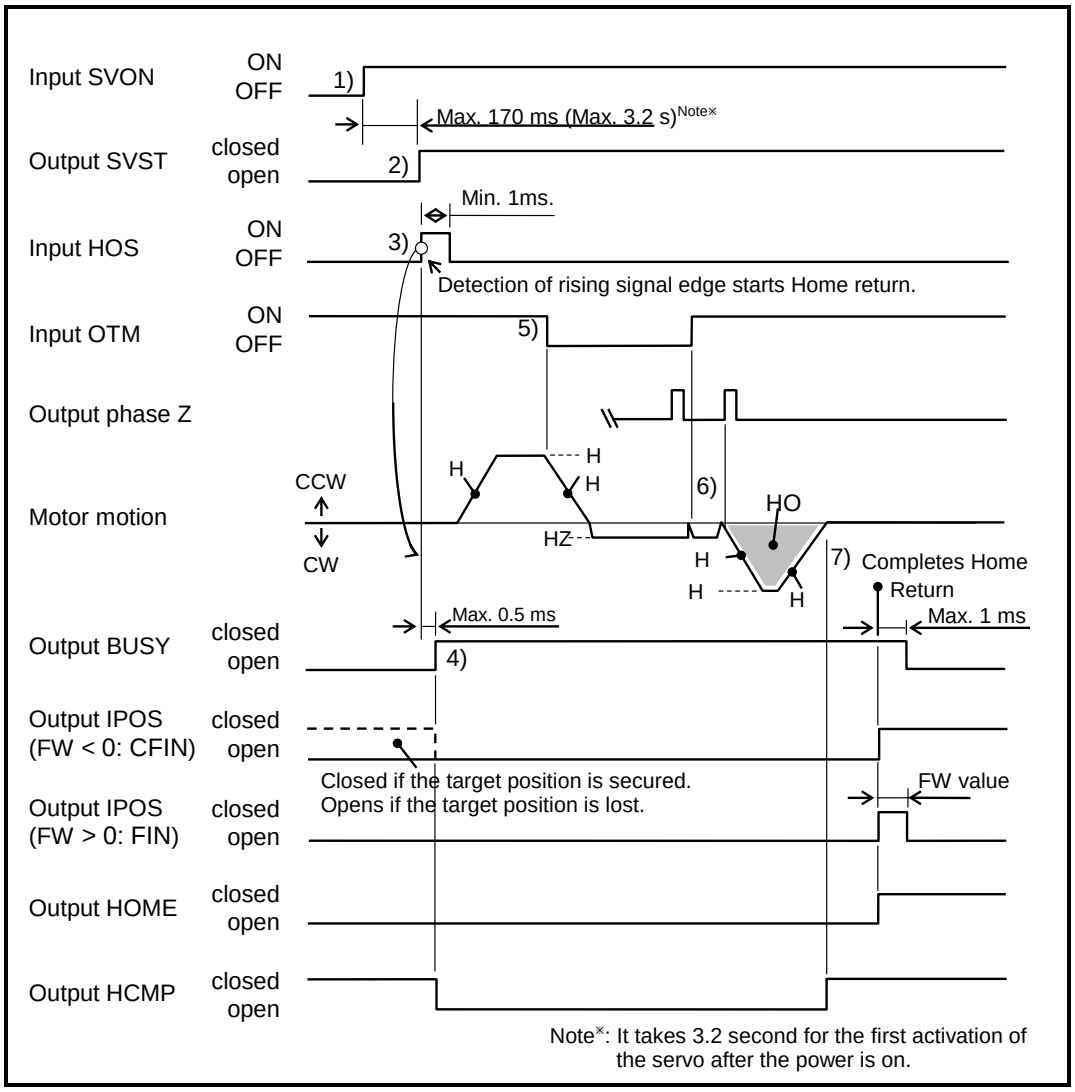

1) Activate the input SVON (Servo on) to turn on the Motor servo.

2) The output SVST (Servo state) closes by an activation of the Motor servo.

3) Activate the input HOS to start the Home Return.
The Motor starts in the direction instructed by the parameter HD (Home Return direction) following the current direction setting of scale system.
(The parameters are set to DI0 and HD1 in the above figure.)
The Motor rotates in accordance with the settings of parameter HA (Home Return acceleration), HB (Home Return deceleration) and HV (Home Return velocity).

4) The output BUSY (In-operation) is closed during Home Return operation. The home position is in a state of undefined, thus the System forcibly opens the output HCMP (Home position defined).

5) The Motor decelerates and stops when the input OTM changes to OFF form ON (because of minus logic set on the shipping set), then gets out the limit sensor area with velocity set by the HZ (Home return near-zero velocity).

6) The Motor rotates to the position at the first phase Z signal after passing the limit sensor area. Then rotates further to the position set by the parameter HO (Home position offset) to define the home position. At this time the output HCMP closes.

◊ Set the parameter value of HO to minus (HO < 0).

7) When the Motor settles at the home position, the outputs IPOS (In-position) and HOME (Home Return complete) close, thus completing the operation.

- If the Home Return operation is interrupted, the System cannot define the home position. Entering of the command for an absolute positioning at this state will cause the warning A5 (Origin undefined).

- You can program the command HS in a program channel. This will make you possible to start the Home Return operation with the inputs RUN (Start program) and PRG (Internal program channel selection).

- The pattern of Home Return operation depends on its starting point as illustrated below.

Fig 8-32: pattern of Home Return Operation (In case of OS7, DI0, HD1 and HO <0)

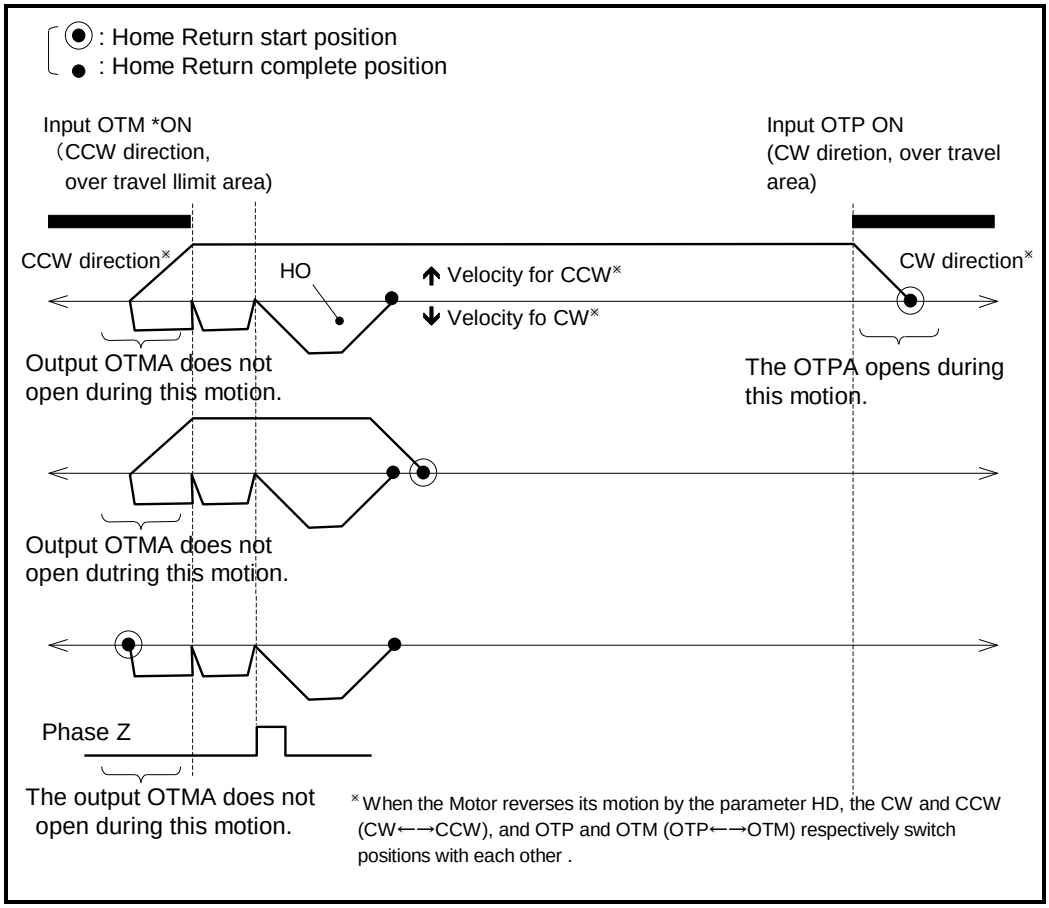

- When the parameter HD is set to HD0, Home Return operation is performed based on the input OTP.

8.8.3. Teaching of Home Position

8.8.3.1. Home Return Mode: OS6

- This mode is to set the current position to the home position.
- This mode does not entail rotation of the Motor but requires the Motor servo is on the same as other Home Return modes.
  - ◊ Refer to "8.8.3.2. Teaching of Home Position in Servo-off Sate" if you require teaching in the servo-off state.
- Teaching of the home position completes when the conditions for completion of positioning operation are met at the teaching position.

Fig 8-33: Signal timing of Home Return operation (In case of OS6)

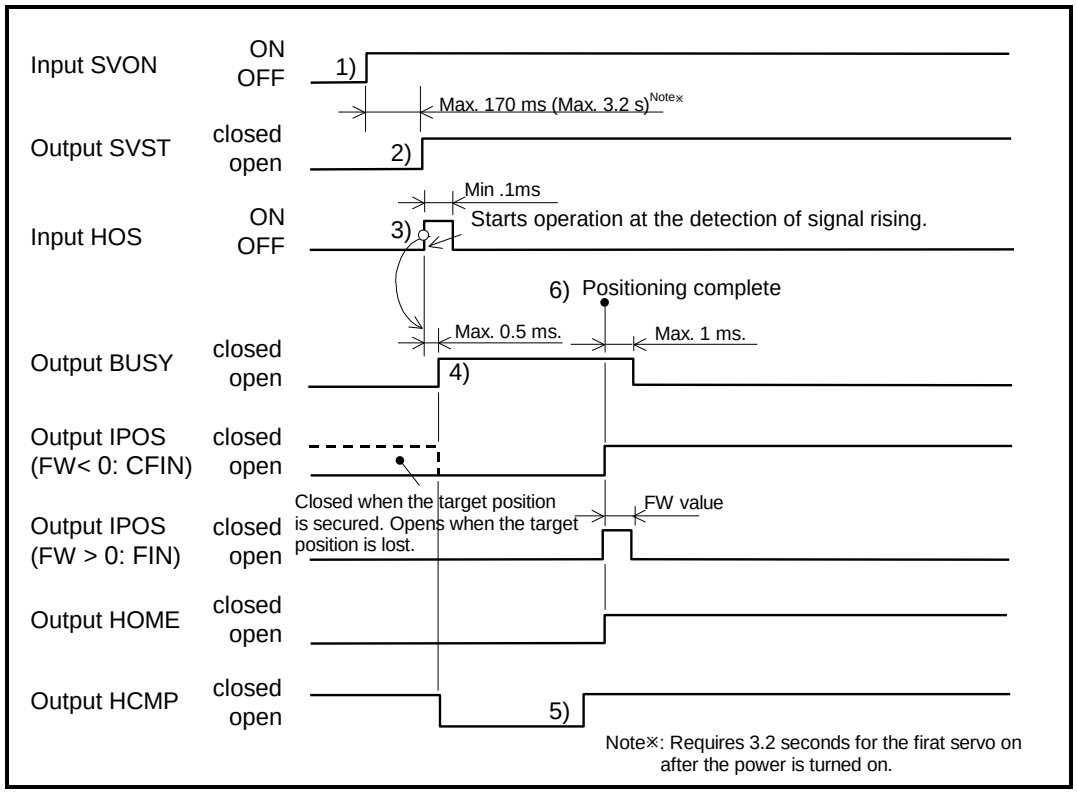

1) Activate the Motor servo by the input SVON (Servo on).
2) The SVST (Servo state) closes when the Motor servo is turned on.
3) Turning the input HOS (Start Home Return) ON starts internal processing to set the current position command to the home position.
4) During the internal processing, the output BUSY is closed. The home position is in the undefined state and the output HCMP is forcibly opened.
5) The output HCMP is closed when the home position is defined.
6) When the motor settles at the home position, the outputs IPOS (In-position) and HOME (Home Return complete) are closed, thus completing the operation.

- If the Home Return operation is interrupted, the System cannot define the home position. Entering the command for an absolute positioning at this state will cause the warning A5 (Origin undefined).
- You can program the command HS in a program channel. This will make you possible to start the Home Return operation with the inputs RUN (Start program) and PRG (Internal program channel selection).

8.8.3.2. Teaching of Home Position in Servo-off Sate

- Setting of the command AZ (Absolute zero position set) to a program enables you to perform the teaching of the home position in the servo-off state.

- The following example shows how to edit the program on the program channel 0.

Fig 8-34: Example of the program for Home position teaching in the servo-off state

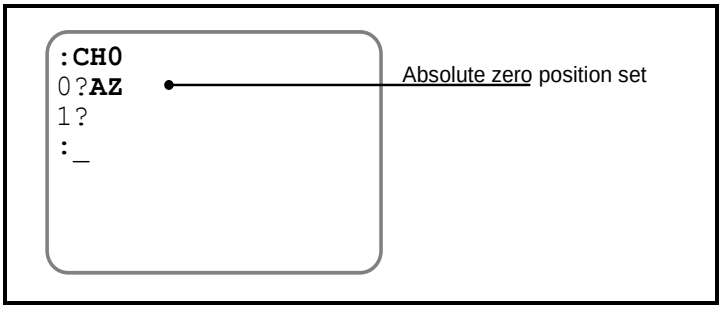

- Use the command SP (Start program) for the execution of above program.

8.8.4. Position Adjustment of Home Limit Sensor

- There are many phase Zs (marker for position detection) inside the Motor.
- In the Home Return operation modes of OS3, 4, and 7, the System senses a change in detecting state of the home limit sensor (travel limit in case for the parameter OS') and recognizes that the Motor is nearing to the home position, and then finally sets the position of phase Z signal as the home position. Thus, the repeatability of detecting home position is well maintained regardless of the sensitivity of the home position limit.

⚠ *Caution : Be sure to adjust the position of limit sensor when the parameter OS is set to OS3, 4 or '7. Otherwise, the repeatability of detecting home position will not be maintained.*

  - Design the position of limit sensor so that it can be adjusted in ± 4.5 angle degrees.

- The following describe the procedure to adjust the home position limit.

1) Temporally set the home limit sensor. At this time set the position on the slightly front side of the position to be the home position.
2) Check the wiring of home limit sensor.
3) Check if the Driver Unit recognizes the input HLS.
   Input the [BS] key to abort repetitive readout.

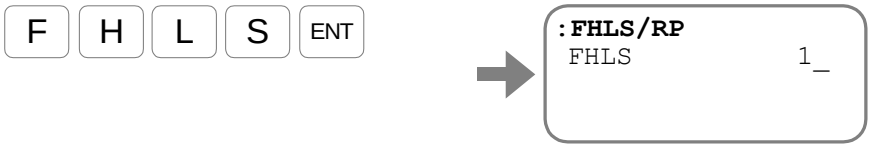

4) Turn the Motor servo on.
5) Check the position of the home limit sensor. Execute the command HS/LS (Home position sensor adjust). The Motor starts the Home Return operation.

◊ Input the [BS] key to stop the Home Return operation.

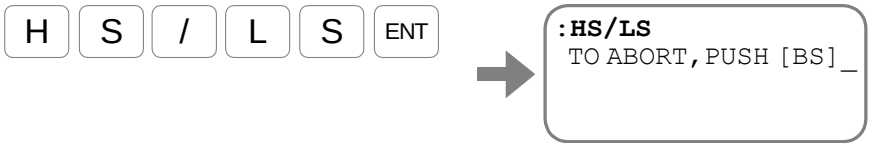

The Motor recognizes the home limit sensor and stops at the first phase Z signal from the changed point of detecting state of the sensor.

6) The display reports how much the home position sensor is off from the phase Z signal.

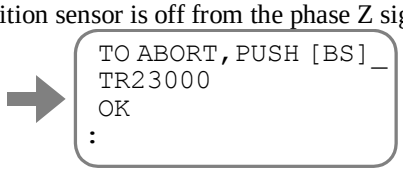

◊ The position of the home limit sensor is acceptable if the readout of the monitor TR (RDC data) is between 16 384 and 49 152.

◊ The position of the home limit sensor is not acceptable if the readout of the monitor TR indicates between 0 and 16 383. In such a case, shift the home limit sensor in the CW direction.

◊ The position of the home limit sensor is not acceptable if the readout of the monitor TR is between 49 153 and 65 535. In such a case, shift the home limit sensor in the CCW direction.

- Repeat the procedure 5) and 6) until you have a satisfactory result.

8.8.5. Teaching of Home Position Offset

- In the Home Return operation, you may set the home position to the point at where the Motor rotated a given amount of rotation from the changed position of the detecting state of home limit sensor (from the phase Z signal in some Home Return mode). The parameter HO (Home offset) sets this given amount of rotation (offset).
  - ◊ Home position offset function is available for the Home Return modes (Parameter OS) besides the parameter OS6.
  - ◊ Teaching of home position offset is only effective right after an execution of the command HS/LS.

- This section describes a way to set the parameter HO by teaching.

1) Execute the command HS/LS and finalize the position of home limit sensor.
   - ◊ Refer to "8.8.4. Position Adjustment of Home Limit Sensor."
2) Turn off the main power supply to the Driver Unit.
3) Input the command MO (Motor off)

Thus the Motor servo will not activate even the input SVON is activated.

4) Move the motor to a position to be the home position.

5) Teach the direction and amount of rotation to the current position as the offset.
(The parameter HO requires an entry of the password.)
Input as **Parameter code**+**/ST** .

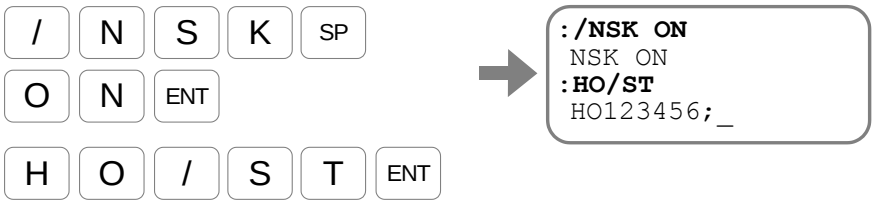

The teaching has set the parameter HO.
Input the SP key for the prompt "colon (:)"

6) Turn on the main power to the Driver Unit.
7) Input the command SV (Servo on) to activate the Motor servo.

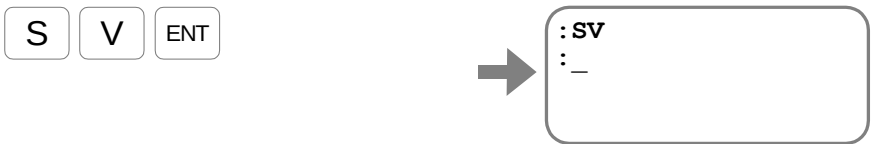

8) Start the Home Return operation.

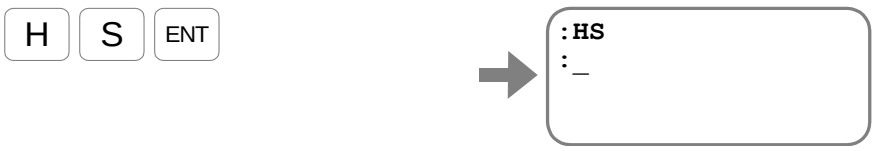

Confirm that the Home Return is completed and the Motor stops at the set position.

8.9. RS-232C Communication

- Commanding to the Driver Unit via RS-232C communication, you can set parameters and conduct trial operation and tuning.

⚠ *Caution : The Driver Unit Model EDD has an EEPROM for the data backup. The EEPROM has the limitation on the number of times for writing/deleting data. (Approximately 100 000 times) Therefore, we recommend setting the command WM1 to prohibit overwriting to the EEPROM for the application where the master controller frequently changes internal parameters. However, execution of the command WD is necessary before turn off the power if revised parameter settings must be stored. (Do not turn the power off during execution of the command WD, because it takes approximately thirty seconds.)*

⚠ *Caution : When USB communication and RS-232C communication are attempted simultaneously, USB communication is processed first and RS-232C communication is processed later.*

8.9.1. Specifications of Communication

- The connector CN1 of the Driver Unit is the input and output port of RS-232C communication.

- When a response contains multiple lines, such as readout of data, the communication waits for an input of the [SP] key (20_H).

  Set the parameter MM (Multi-line mode) to MM0 if an input of the [SP] key (20_H) is not necessary, such as communicating with a higher level device.

  ◊ This setting will make an input of the [SP] key (20_H) unnecessary even a response consists of multi-line.

Table 8-39: Specification of RS-232C communication

Item	Specification
Transmission	Asynchronous, full duplex
Communication speed	9 600 b.p.s.
Word length	8-bit
Stop bit	2-bit
Parity check	None
Character code	ASCII code
Communication procedure	• X– parameter: Not available • Control signal (RTS/CTS):: Available

8.9.2. Communication Procedure

- The communication cables need to be provided by the customer. For the wiring of communication cables, see "Appendix 7: Wiring of RS-232C Communication Cable."

  For pin assignment, see "2.9.1. CN1:RS-232C Serial Communication Connector" and the instruction manual of your personal computer.

  ◊ The pin assignment of RS-232C connector forDriver Unit Model EDD is different from that of DOS/V machine.

  ◊ For the connecting cables, our communication cables "M-C003RS03" (sold separately) can be used.

  ◊ With a personal computer that has no COM ports, USB ports can be used. In this case, the communication should be performed by using a commercially available "RS-232C ←→USB conversion adaptor." The adapter whose operability has been confirmed is USB serial cable "SRC06-USB" manufactured by Arvel.

8.9.2.1. Power on

- If a terminal (such as NSK Handy Terminal FHT31) is connected to the CN1 connector and the Driver Unit power is turned on, the message shown below appears on the terminal screen. The contents (the number of characters) of this message may differ with the setting condition of the Driver Unit and System versions.

- When the initialization of the Driver Unit completes, a prompt (colon [:]) appears and the System waits for an entry of command.

```
NSK MEGATORQUE
XSY*****.*,XOP*
DD1DA0_0000.0
:_
```

The part indicated by * depends on the system.

⚠ *Caution : Be sure to turn off the power for the Driver Unit when connecting and disconnecting the communication cable. (Otherwise it may result in failure of the Driver Unit.*

8.9.2.2. Command Entry

- Input a command in the order of [Command name] + [Data] + [Carriage return ($0D_H$)].
  - ◊ There are some commands that do not have data.

- For an example, send the following code to the Driver Unit to set the parameter VG (Velocity loop proportional gain) to VG0.5.

V	code (56_H)
G	code (47_H)
0	code (30_H)
.	code ($2E_H$)
5	code (35_H)
⩛ Carriage return code ($0D_H$)	

※ Press the [ENT] key when the Handy Terminal FHT21 is used.

- The Driver Unit echoes back for every input of a character. (The Driver Unit echoes back the same character it has received from the communicating terminal.)
  - ◊ However, the Driver Unit converts an input of the carriage return ($0D_H$) to [Carriage return ($0D_H$)] + [Linefeed ($0A_H$)] and returns it to the terminal.

- When the last carriage return code is input, the Driver Unit collectively decodes the character string it has received (VG0.5 in the example above) and executes it. Therefore, a command won't be executed unless it ends with the carriage return code.
  - ◊ When the Driver Unit is ready for an input of the next command, it returns the prompt [colon (:)] right after the linefeed code ($0A_H$).

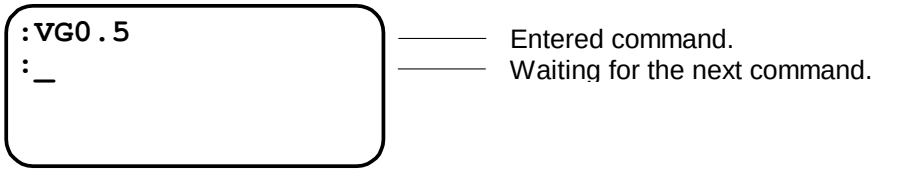

Input (to Driver Unit)

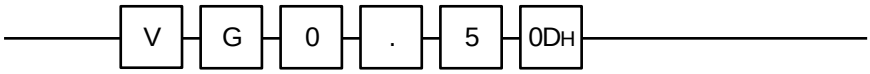

Echo backe (from Driver Unit)

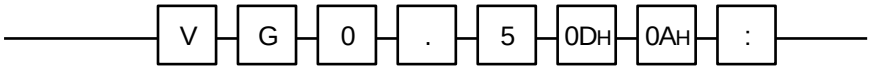

8.9.2.3. Cancelling Command

- An input of a backspace code Backspace (08H) cancels a character of the command that has been entered halfway.
- For an example, when the backspace code (08H) is input following a character string of "VG0.5," the cursor moves one space back to the position where 5 was input and thereby deletes it.

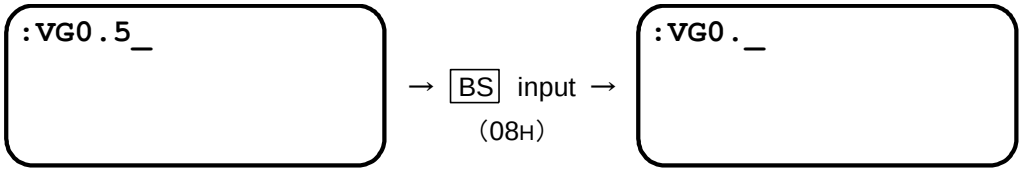

Input (to Driver Unit)

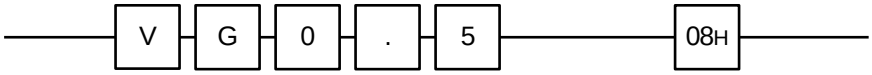

Echo back (form Driver Unit)

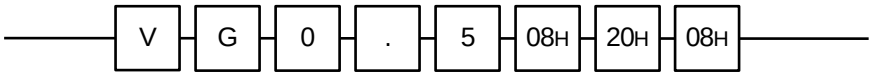

8.9.2.4. Input of the Password

- Some special commands require password entry for preventing erroneous entries.
- Input the password as /NSK ON + Carriage return (0DH).
  - ◊ The Driver Unit returns"NSK ON"for the acknowledgment.
- A command that requires the password can be executed immediately after an entry of the password.

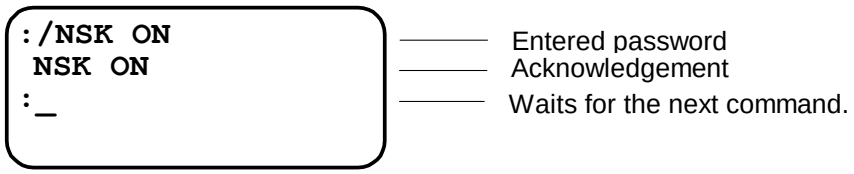

Input (to Driver Unit)

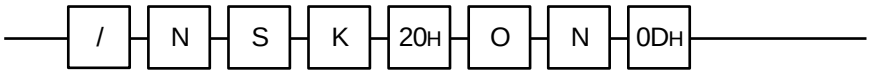

Acknowledgement (from Driver Unit)

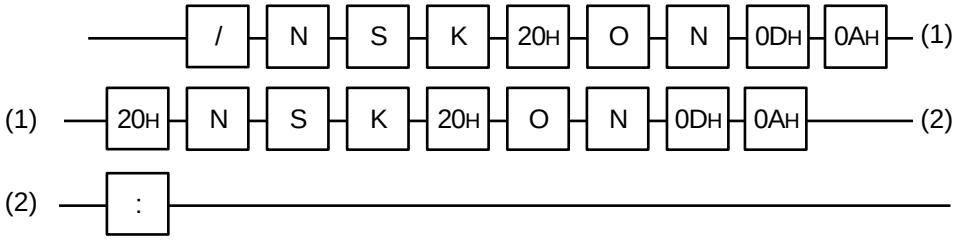

8.9.2.5. Readout of Parameter Settings and Internal State

- Input as [?]+[Command name] + [Carriage return (0D$_H$)] to read out a set value of parameter.
- The example below is to read out the set value of the command VG. However, the System has another command VGL that includes same two characters V and G. In such a case, the settings of the two commands will be read out.

```
:?VG
 VG0.5
 VGL0.50
:_
```

← Entered command
← Readout of velocity gain
← Readout of velocity gain, lower
← Waits for the next command.

Input (to Driver Unit)

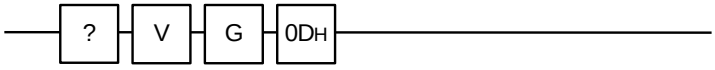

Readout (from Driver Unit)

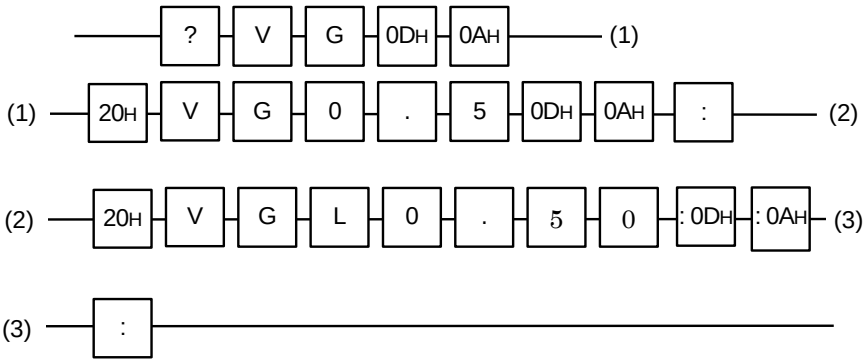

⚠ *Caution : When the parameter MM is set to MM1, the prompt semicolon (:) is added to the end of line. Input of [20$_H$] is required every time the prompt (;) appears.*

- For readout of internal stat, input as [Command name] + [Carriage return (0D$_H$)].
- For an example, let's read out the current position (in units of pulse).

```
:TP5
 TP100
:_
```

← Entered
← Readout of current position data
← Waits for the next command.

Input (to Driver Unit)

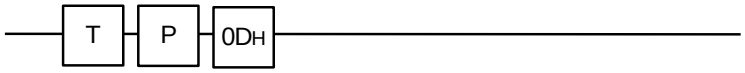

Readout (from Driver Unit)

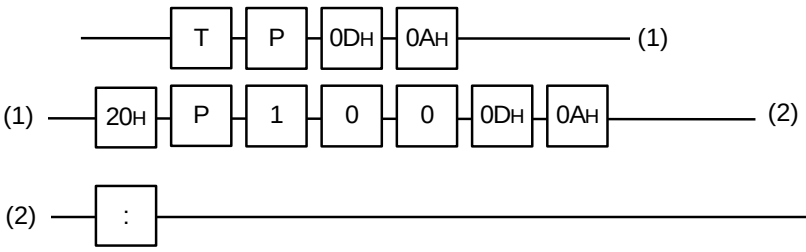

8.9.2.6. Reading out Parameter Settings by a Group

- Many parameters are set in the Driver Unit and the command TS (Tell setting) reads out the parameter settings in function group. (Refer to "9. Details of Command and Parameter" for details of the command TS.)

- If the Driver Unit returns many information and message lines for one command, like for the command TS, the readout repeats as follow.

  Space (20_H) + Command name + Data + Carriage return ($0D_H$) + Linefeed ($0A_H$)

- The following show an example to read out the settings of servo parameters using the command TS.

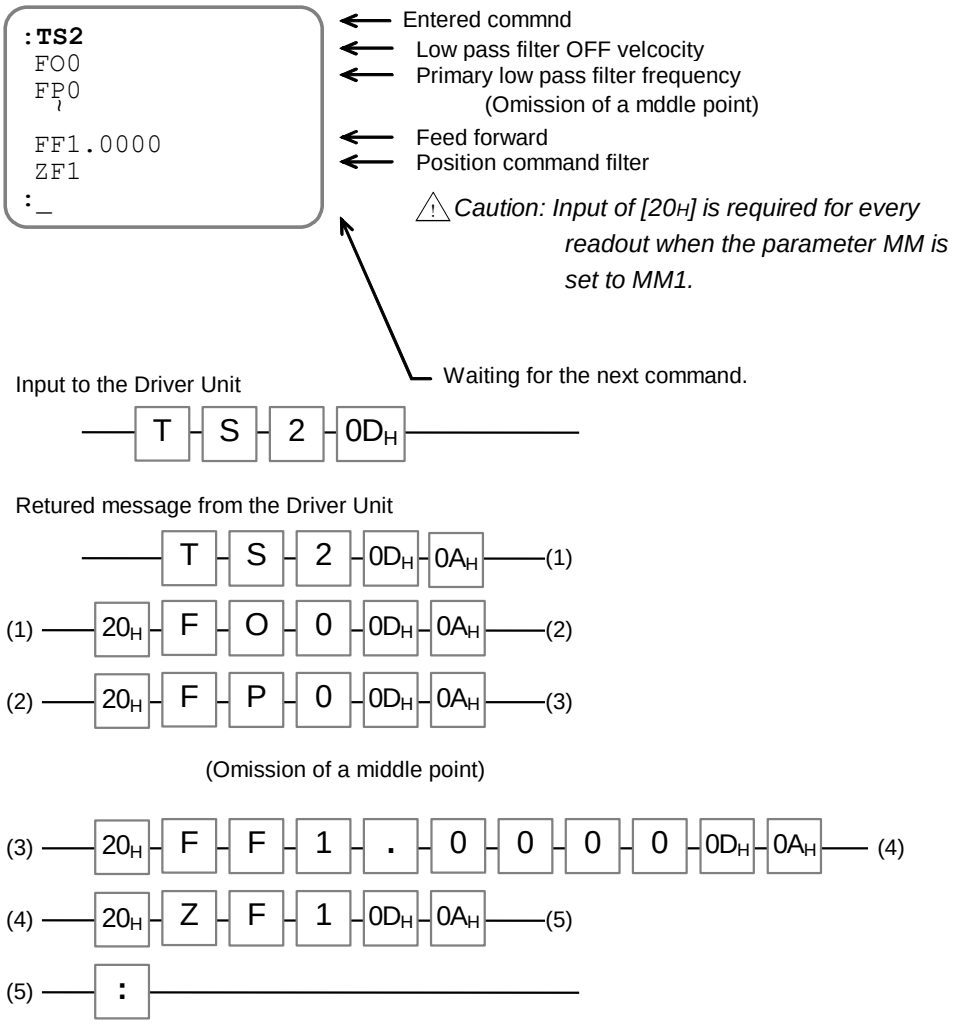

8.9.2.7. Error Message

- Following error message will be returned for an input of erroneous command.
- In such a case, an error message will be sent in sequence as shown below.
  Space (20_H) + Error message + ? + Carriage return ($0D_H$) + Linefeed ($0A_H$)

Table 8-40: List of error message

Message	Explanation	Example
Command?	Inputted an erroneous command name.	:DF DF?
UNKNOWN OPTION?	Unknown option is instructed.	:TP/AB UNKNOWN OPTION?
READ ONLY?	This command is exclusive for readout. Inputted a command to a monitor to set a numerical value.	:TE/AJ READ ONLY?
READ INHIBIT?	Readout is not available. Inputted to read out settings to an execution command, such as positioning command.	:AD/AJ READ INHIBIT?
RANGE OVER?	Inputted data is out of setting range.	:VG256 RANGE OVER?
COND. MISMATCH?	Required conditions are not met for an execution of the inputted command. (such as the command for servo-ON) The required condition depends on a command.	:MO :AD9000 COND. MISMATCH?
NOT OMISSIBLE?	A data is not inputted with a command or a parameter that requires a data.	:PG NOT OMISSIBLE?
PASSWORD REQUIRED?	The password is not inputted for a command that requires it.	:LO0.001 PASSWARD REQUIRED?
DISABLE COMMAND?	Input a command that cannot be programmed to a program channel.	CH0 0?MS DISABLE COMMAND?
MEMORY FULL?	The memory capacity is full because all program channels have more than 1,024 command lines.	CH255 0?AD0 MEMORY FULL?

```
:ABCDE
 ABCDE?
:_
```

If “ABCDE” is entered, the Driver Unit returns an error message since the character string is not a command.

Input (to Driver Unit)

Return message (from Driver Unit)

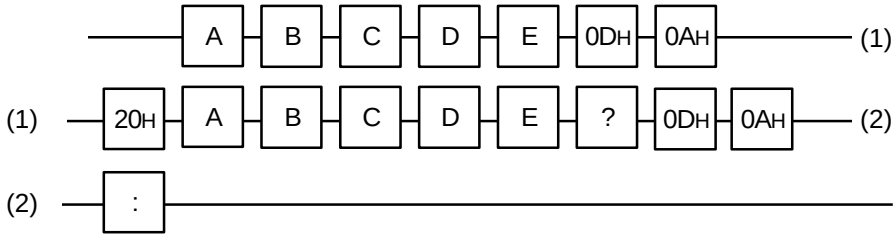

(Blank Page)

9. Details of Command and Parameter

9.1. Difference of RS-232C Communication and USB Communication

As the method to input commands and parameters, there are RS-232C communication and USB communication.

- When using USB communication, be sure to use "EDD Megaterm."

9.1.1. Different Commands between RS-232C Communication and USB Communication

- When editing the program operation by USB communication, be sure to use the channel editing screen of EDD Megaterm.
  In the terminal screen of EDD Megaterm, you cannot edit the lines in the middle.
  The teaching function of the position data coordinates can not be used on the terminal screen of EDD Megaterm.

- When changing the contents of a demonstration operation by USB communication, substitute this function by channel editing function.

Table 9-1: Commands that have limited functions in USB communication

Command	Meaning	RS-232C	EDD Megaterm
CH	Channel editing	Edition of line in the middle: Yes Edition of line at the end: Yes Teaching the position data: Yes	Edition of line in the middle: No Edition of line at the end :Yes Teaching the position data: No
SP/AJ	Demonstration operation	Test operation: Yes Change of test operation: Yes	Test operation: Yes Change of test operation: No
TA/HI	Alarm history display	For the recent 32 times	For the recent 10 times

9.1.2. Simultaneous Operation of RS-232C Communication and USB Communication

- RS-232C communication and USB communication can be operated simultaneously. Note that USB communication will be processed first when both are input at the same time.

- However, note that, when command AT:Auto Tuning and Command OP: Output Port Forced output are conducted by USB communication, execute this in the state where no RS-232C communication is running.

9.1.3. Command Parameters Invalid in USB Communication

- Following parameters can be set up in USB communication, but since these are for RS-232C communicaiton, they are invalid in USB communication.

Table 9-2: Parameters invalid in USB Communication

Command	Meaning	Impact to RS-232C	Impact to USB communication
MM	Switching of display mode	Yes	No
BM	Switching of backspace key function	Yes	No
MR	Monitor refreshing rate	Yes	No
OD	Display of version at power on	Yes	No

9.1.4. Inhibited Operations in USB Communication

- In EDD Megaterm, the commands shown below cannot be used under specific conditions.

Table 9-3: Commands that cannot be used under specific conditions

Command	Meaning	MM is being executed in EDD Megaterm	Any command is being executed in RS-232C
CH	Channel editing	No	Yes
PI	Control input editing	No	Yes
PO	Control output editing	No	Yes
AT	Auto Tuning	No	No
OP	Output Port Forced output	No	No
SI	System initialization (only servo parameters)	No	No
SI/SY	System initialization (all parameters except for AO)	No	No
SI/AL	System initialization (all parameters)	No	No
JG/PL	Jogging operation (plus direction)	No	No
JG/MI	Jogging operation (minus direction)	No	No
HS/LS	Home limit sensor mounting position adjustment	No	No

When a command is executed in the condition of "No", an error message will be displayed.

- Do not execute following operations in EDD Megaterm.
  - ◊ Transferring to other screen when any command of Table 9-5 is being executed in the Terminal screen.
  - ◊ Pressing the shutdown button when any command in Table 9-5 is being executed in the Terminal editing screen, or disconnecting the USB cable.

- The behavior of Driver Unit when conducting the above operations will be as follows.

Table 9-4: Behavior of Driver Unit when inhibited operations are conducted

Command	Meaning	Transferring to other screen while command is being executed	Disconnecting USB cable while command is being executed
/RP	Repeated display	Command cancel	Command cancel
/AJ	Adjusting	Command cancel	Command cancel
/WW	Multi-monitor	Command cancel	Command cancel
CH	Channel editing	Command cancel	Communication unavailable (Rebooting of Driver Unit requiered)
PI	Control input editing	Command cancel	Communication unavailable (Rebooting of Driver Unit requiered)
PO	Control output editing	Command cancel	Communication unavailable (Rebooting of Driver Unit requiered)
AT	Auto tuning	Command cancel	Communication unavailable (Rebooting of Driver Unit requiered)

9.2. Handling Instruction of Command and Parameter

9.2.1. Character String of Command

- There shall be no discrimination between lowercase and uppercase characters in command character strings. For example, input of "VGL ENT " or "vg1 ENT " will be processed as the same.
  - ◊ The all echo back of input characters will be upper case characters.
- The command will be properly processed regardless of whether placing a space between the command code and the data.
  - ◊ Non-printable characters will also be neglected.
- An error occurs if you don't attach the data to a command that requires it.
  Be sure to input the data even it is 0 (zero).

9.2.2. Grammar of Command

Table 9-5: Grammar for Command

Category	Function	Execution	Grammar	Example
Command	Command the Driver Unit for execution of operation or processing Some commands do not entail data entry.	Execution of command	Command code + Data + CR	90 [°] incremental positioning **ID9000**
Parameter	Sets the operating conditions of internal function of Driver Unit.	Data setting	Command code + Data + CR	Velocity 0.5 [s^{-1}] **MV0.5**
		Readout of data.	**?** + Parameter code + CR	Read out velocity. **?MV**
		Continuous readout of data	Parameter code + **/RP** + CR of **?** + Parameter code + **/RP** + CR	Continual readout of velocity. **MV/RP** or **?MV/RP**
Monitor	Monitors internal conditions of Driver Unit.	Data. monitoring	Monitor code + CR or **?** + Monitor code + CR	Monitor of position scale data in units of angle **TD** or **?TD**
		Continuous data monitoring	Monitor code + **/RP** + CR or **?** + Monitor code + **/RP** + CR	Monitor of position scale data in units of angle **TD/RP** or **?TD/RP**

*CR is an abbreviation of Carriage return (0DH).

9.2.3. Error Message

- If a command cannot be processed, the Driver Unit outputs an error message shown in Table 9-6 below in accordance with the situation.
- In such a case, the Driver Unit returns the message in a sequence of Space (20H) + Error message + ? + Carriage return (0DH) + Linefeed (0AH).

Table 9-6: List of error message

Response	Description	Example
Command code?	Error in inputted command code.	:DF **DF?**
UNKNOWN OPTION?	Unknown option is instructed.	:TP/AB **UNKNOWN OPTION?**
READ ONLY?	This command is exclusive for reading out. (Entailed a data to a command for monitoring.)	:TE/AJ **READ ONLY?**
READ INHIBIT?	Readout is not available. An operation command, such as positioning command, was inputted for monitoring.	:AD/AJ **READ INHIBIT?**
RANGE OVER?	Inputted data is out of the specified range.	:VG256 **RANGE OVER?**
COND. MISMATCH?	Inputted command does not meet the condition for execution. (Such as servo on) Required conditions depend on a command.	:MO :AD9000 **COND. MISMATCH?**
NOT OMISSIBLE?	Data is not specified for a command or parameter that requires data entry.	:PG **NOT OMISSIBLE?**
PASSWORD REQUIRED?	The password is not inputted for a command that requires it.	:LO0.001 **PASSWARD REQUIRED?**
DISABLE COMMAND?	A command not suited for programming is attempted to set on a program channel.	CH0 0?MS **DISABLE COMMAND?**
MEMORY FULL?	Accumulated program command lines in all program channels have exceeded 1.24 lines.	CH255 0?AD0 **MEMORY FULL?**

9.2.4. Multi-statement on a Line

- This is a way to input multiple commands and parameters on a command line following the prompt.
  - ◊ This method is not available for programming.
- Execution of commands will be processed from left to right sequentially.
  - ◊ Execution of the multi-statements function will be interrupted when an error occurs.

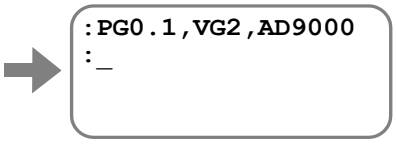

9.2.5. Wildcard Search

- When a letter of alphabet is specified following the "?", all corresponding commands and parameters will be displayed.
  - ◊ When only the "?" is inputted, all commands and parameters will be displayed.
  - ◊ The prompt ";" is on the end of each line when reading out multiple commands or parameters. In such a case, press the SP key to scroll to the next menu or terminate the readout by the BS key

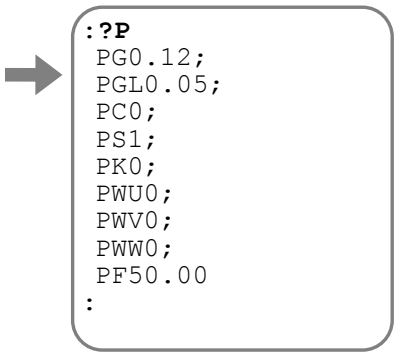

- In the display in the terminal screen of EDD Megaterm, all corresponding parameters and commands are displayed in a screen.

9.2.6. Repeating Readout

- When an option code "/RP" is added to a readout command such as the command TP, the System repeats to display the readout.
  - ◊ A press of the BS key terminates repetitive readout.

- Adjust the parameter MR (Monitor refresh rate) when the settings of parameters are hard to read because of their frequent changes. The readout stays on the display for a time set by the parameter MR for easy confirmation of readout.

9.2.7. Multi-monitor

- For Multi-monitor, use either RS-232C communication or USB communication for the communication.
- The following example describes how to monitor simultaneously the monitor TP (Monitor current position in units of pulse) and the monitor TV (Monitor current velocity). The function to monitor multiple conditions simultaneously is called "Multi-monitor."

1) Input the monitor TP to the multi-monitor.
Input as Monitor code + /WW.

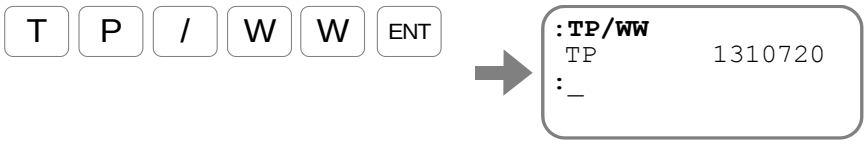

2) And subsequently input the monitor TV.

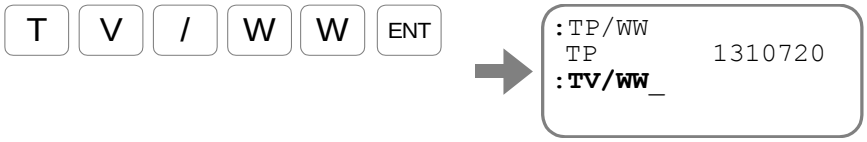

Thus, two conditions can be monitored simultaneously. You may input the command in this state.

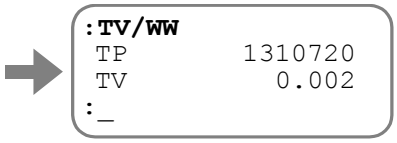

- Input the command WWC for cancellation of Multi-monitor.

9.2.8. Initialization of Specified Parameter

- Setting of a parameter can be reset to the shipping set when the option "/RS" is added to a parameter code.

◊ Input the command SL/AL (Set initial parameter) to initialize all parameters.
The command SI does not initialize settings of programs and control Inputs/Output. Use the following commands according to need.

- For initialization of program: Command CC/AL
- For initialization of control Input/Output: Command PI/CL or PO/CL
- Initialization of alarm History: Command TA/CL

9.2.9. Adjusting

- When setting the option code "/AR" to a parameter code, you may increase or decrease a value of parameter by the keys [+]/[-]

  ◊ The keys [.] and [=] change an increment or decrement of an input of the keys.

  ◊ Input of [R] key will reset to the shipping set.

Table 9-7: Keys to be used for adjustment

Key	Description
+	A press of the key increases a value as indicated.
-	A press of the key decreases a value as indicated.
.	A press of the key changes an increment or decrement the step to 1/10 of current setting.
=	A press of the key changes an increment or decrement of the step to 10 times of current setting.
R	A press of the key resets the value to the shipping set.
[BS]	A press of the key reset the value before adjustment and terminates adjust mode.
[ENT]	A press of the key sets the value as adjusted and terminates adjusting mode.

9.2.10. Output to Analog Monitor

- The readout will be outputted to the primary analog monitor when the option code "/MN" is attached to the parameter. In such a case, the default monitor offset or default range is specified.

  ◊ Parameter MNY (Primary analog monitor offset) changes the offset.

  ◊ Parameter MNR (Primary analog monitor range) changes the monitor range.

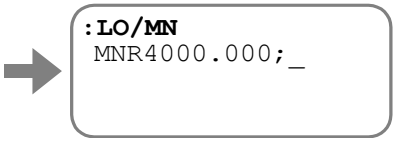

- The readout will be outputted to the secondary analog monitor when the option code "/MX" is attached to the parameter. In such a case, the default monitor offset of default range is specified.

  ◊ Parameter MXY (Secondary monitor offset) changes the offset.

  ◊ Parameter MXR (Secondary analog monitor range) changes the monitor range.

9.3. Glossary of Command and Parameter

- The password must be entered before input of a command that is marked with "★".
  - ◊ No entry of the password is necessary for setting to a program.
- Depending on its option code, a command marked with "(★)" requires entering the password.
- A command marked with "(★★)" is for factory use only. The user is not allowed to input the command.
- A command that is marked with "***P***" indicates that you can also input the command to an internal program.
- A command that is marked with "***P ex.***" is exclusive for internal program use.
- "Shipping set" denotes a value that is set in the factory before shipment.
- Conditions to be met denotes that required conditions for execution of the command.
  - ◊ If the all conditions are not met, error of "COND. MISMATCH?" occurs.

★P AC : Analog Command Mode

- This defines the valid/invalid of analog command input and also the polarity.
  AC0 : Analog command input invalid. (DC command is valid.)
  AC1 : Analog command input valid. (Voltage + : CW direction)
  AC-1 : Analog command input valid. (Voltage + : CCW direction)

Type	Command
Format 1	**AC** *data*
Data range	-1, 0, 1
at shipment	0

- Note that when the coordinate is inverted (DI1) by the parameter DI command, the polarity is further inverted.

P AD : Absolute Positioning, Degree

- Executes a positioning to the target position.
  - ◊ Refer to "6.3.1. Positioning Command" for details.

Category	Command	
Format 1	**AD** *data*	:Shorter way positioning
Format 2	**AD** *data* **/PL**	:Positioning in the plus direction
Format 3	**AD** *data* **/MI**	:Positioning in the minus direction
Data range	0 to 35 999[0.01°]	:Position scale
Conditions to be met	• The Motor servo is on. • Not in the middle of operation caused by an internal command (positioning command, jogging and Home Return). • The Motor is not stopping because of alarm or warning • The input STP (Stop) is not activated.	

- In case of the shorter way positioning, the Motor operates in one of the following manners.
  - ◊ Rotates to the target position in the direction of shorter way.
  - ◊ When the current position and the target position is the same, the move distance is zero.
  - ◊ In case that the off-limits area is specified by the parameter OTP (Software travel limit), the Motor rotates to the opposite direction of the off-limits area regardless of the distance.
- The monitor TD (Monitor current position in units of 0.01°) enables to read out the position data in units of angle degree.
- By using the "/ ST" option when editing a program in RS-232C communication, you can teach the current position as the target position for positioning.The "/ ST" option can not be used when editing a program via USB communication.

★ AE : Program Auto Execution

- This parameter automatically executes a program when the power is turned on.
  - ◊ Refer to "8.7.2. Automatic Program Execution at Power on" for more details.

Category	Parameter	
Format	**AE *data***	
Data range 1	–1	: Disabled automatic execution of program
Data range 2	0 to 255 [Channel]	: Automatically executes a program of specified program channel when the power is turned on.
Shipping set	–1	

★P AF : Analog Command Offset

- This sets up the offset against analog command input voltage.
  - ◊ Refer to ”6.3.6.4 Analog Command Input Offset.”

Category	Command	
Format 1	**AF/ST**	: Automatic adjustment
Format 2	**AF *data***	: Manual adjustment
Data range	-3276 to 3276	
Shipping set	0	

AFP : Analog Command Filter, Primary

- This sets up the low-pass filter against analog input command.

Category	Command	
Format 1	**AFP *data***	
Data range 1	0	Primary analog command filter is OFF.
Data range 2	10 to 1000 [Hz]	
Shipping set	200	

AFS : Analog Command Filter, Secondly

- This sets up the low-pass filter against analog input command.

Category	Command	
Format 1	**AFS *data***	
Data range 1	0	Secondary analog command filter is OFF.
Data range 2	10 to 1000 [Hz]	
Shipping set	200	

★P AG : Analog Command Gain

- This sets up the analog command gain in velocity and torque control modes.

Category	Command
Format 1	**AG *data***
Data range	0.0001 to 2.0000
Shipping set	1

- This is the ratio against velocity command or torque command.
  - ◊ For example, in the case of AF0.5,
    the actual velocity command will be velocity command input x 0.5.

AI : A/D Conversion Value

- This reads out the analog voltage value being applied to AIN+.
  - ◊ The voltage value being applied to AIN+ will be displayed whatever the setting of AC is.

Category	Command
Format	**AI/RP**

- When executing an AI command with /RP attached, readout will be repeatedly executed, while when /RP is not attached, the readout will be done only once. To terminate the repetition, press [BS] key.
- The display will be in decimal notation of the range -32767 to 32767.

AM : Alarm

- This is to monitor current alarm or warning.

Category	Monitor
Format	**AM**

- This function monitors currently reported abnormality in the System.
  - ◊ Once an abnormal state is detected in the System, the Driver Unit gets in alarm or warning state and holds this situation until it is cleared. The command TA (Tell alarm) monitors the detected alarm and warning.
  - ◊ The monitor AM is to monitor only currently occurring abnormality, not the abnormality held by the Driver Unit.
- The following show a monitoring example and corresponding alarm and warning.
  - ◊ Input AM or AM/RP.
  - ◊ Press the [BS] key to abort repetitive monitoring.

Figure 9-1: Example of Monitor AM

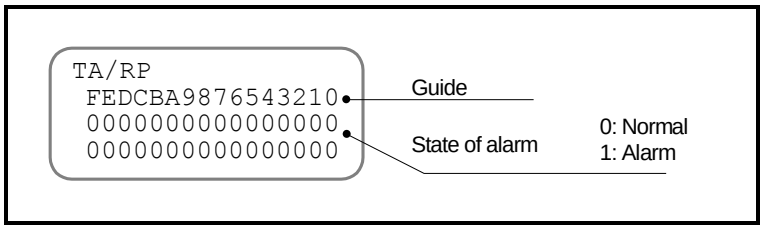

Table 9-8: Readout of Monitor AM

Guide	F	E	D	C	B	A	9	8	7	6	5	4	3	2	1	0
Alarm code	F3 (−)	F3 (+)	F2 (−)	F2 (+)	F8	F5	P5	C5	C0	A4	A3	F1	P9	P3	P2	P1
	P0	A9	A7	A2	A1	A0	C4	C3	A5	F4	E9	E8	E7	E2		E0

★P AO : Absolute Position Scale Offset

- Sets the offset value from the Motor home potion to the user home position.
  - ◊ Refer to "6.2.3. Setting Home Position" for details.

Category	Parameter
Format	**AO *data***
Data range	0 to 2 621 439 [pulse]
Shipping set	0

- The offset value is counted from the Motor Home position in the CW direction seen from the Motor output axis, regardless of the setting of parameter DI (Direction inversion).
- The parameter AO is automatically set if the scale home position is defined in the following manners. .
  - ◊ Execution of the command AZ (Absolute zero position set)
  - ◊ Completion of Home Return

P AQ : Absolute Positioning, User Scale

- Executes a optioning to the target position.
  The target position is specified in the units of parameter QR (Dividing number, user scale).
  - ◊ Refer to "6.3.1. Positioning Command" and "8.6.4. User Scale Positioning" for details.

Category	Command	
Format1	**AQ *data***	: Positioning in shorter direction
Format 2	**AQ *data* /PL**	: Position in the plus direction
Format 3	**AQ *data* /MI**	: Positioning in the minus direction
Data range	0 to (QR – 1) [360°/QR]	: Position data
Conditions to be met	• The Motor servo is on. • Not in the middle of operation caused by an internal command (positioning command, jogging and Home Return). • The Motor is not stopping because of alarm or warning • The input STP (Stop) is not activated.	

- In the shorter way positioning, the Motor moves in the following direction.
  - ◊ In the shorter direction to the target position.
  - ◊ When an off-limits area is specified by the parameters OTP and OTM (Software over travel limit), the Motor rotes in the direction not to gets in the area, regardless of moving distance.
- The monitor TQ (Tell position, QR unit) reads out the position in units of user position scale.

P AR : Absolute Positioning, Resolver

- Executes a positioning to the target position.
  - ◊ Refer to "6.3.1. Positioning Command" for details.

Category	Command	
Format 1	**AR *data***	: Positioning in the shorter direction.
Format 2	**AR *data* /PL**	: Positioning in the plus direction
Format 3	**AR *data* /MI**	: Positioning in the minus direction.
Data range	0 to 2 621 439 [pulse]	: Positioning in units of pulse.
Conditions to be met	• The Motor servo is on. • Not in the middle of operation caused by an internal command (positioning command, jogging and Home Return). • The Motor is not stopping because of alarm or warning • The input STP (Stop) is not activated.	

- The Motor moves in the shorter way positioning.
  - ◊ The Motor moves in the shorter direction to the target position.
  - ◊ The moving direction is zero when the current position and the target position is the same.
  - ◊ When an off-limits area is specified by the parameters OTP and OTM (Software over travel limit), the Motor rotes in the direction not to gets in the area, regardless of moving distance.
- The monitor TP (Tell position, unit pulse) reads out the position data in units of pulse.
- By using the "/ ST" option when editing a program in RS-232C communication, you can teach the current position as the target position for positioning.The "/ ST" option can not be used when editing a program via USB communication.

AT : Auto Tuning

- Automatic estimation of load inertia enables to set the servo parameters.
  - ◊ Refer to "5.2. Tuning Level 1: Automatic Tuning" for details.

Category	Command
Format	**AT**
Conditions to be met	• The Motor is not stopping because of alarm or warning • The input STP (Stop) is not activated.

- When the Motor servo is off, it will be automatically on during the automatic tuning.
- The parameters that are set by the automatic tuning are LO, SG (PG and VG) FP and FS.
  - ◊ The automatic setting of the parameter SG sets the parameters PG and VG indirectly.

★P AZ : Absolute Zero Position Set

- Sets the home position of position scale.
  - ◊ Refer to "6.2.3. Setting Home Position" and "8.8.3.2. Teaching of Home Position in Servo-off State" for details.

Category	Command
Format	**AZ**
Conditions to be met	• One of following alarms is not occurring. • A0>Position Sensor Error • A1>Absolute Position Error • A4>Over Speed

- Sets the current commanded position to the scale home position. The commanded position means that:
  - ◊ When the servo is on: Commanded position = Current position + position error
  - ◊ When the servo is off: Commanded position = Current position
- Execution of the command AZ sets automatically the value of the parameter AO (Absolute position scale offset).

BDT : (Application use only)

- This is reserved for EDD Megaterm (application software) only. Do not change the setting. . .

★P BL : Observer Limit

- Limits external disturbance control output (Output of observer) to specified ratio.
  - ◊ Refer to " 8.5.1. Servo Block Diagram" for details.

Category	Parameter
Format	**BL *data***
Data range	0.00 to 100.00%
Shipping set	100.00

★P BM : Backspace Mode (Function setting to the [BS] key)

- Sets function of the backspace key ([BS] key).

Category	Parameter	
Format	**BM *data***	
Data range	0 1	: Deletes one line of inputted character strings. : Deletes an inputted character.
Shipping set	1	

P BW : Busy Width

- Specifies the minimum signal holding time of the BUSY output (In-operation).
  - ◊ Refer to "7.2.5. In-operation: BUSY" for details.

Category	Parameter
Format	**BW *data***
Data range	0.0 to 10 000.0 [ms]
Shipping set	0.0

(★) CC : Clear Channel:

- Deletes the contents of the program of a channel specified by the command.
  - ◊ Refer to "6.3.2.3. Programming" for details.

Category	Command	
Format 1	**CC *data***	
Format 2	**CC /AL**	: Deletes the programs of all channels and resets the demonstration program. (The password is required.)
Data range 1	0 to 255 {Channel}	: Deletes the contents of the program in the specified channel.
Data range 2	256	: Resets the demonstration program (SP?AJ) to the shipping set.
Conditions to be met	• No programmed operation is performed.	

CD : Delete Channel

- Deletes the channel specified by the command.
  - ◊ Refer to "6.3.2.3. Programming" for details.
- The numbering of following channels goes up by one.

Category	Command
Format	**CD *data***
Data range	0 to 255 [Channel]
Conditions	No programmed operation is performed.

- The figure below is the example for the command CD2.

Figure 9-2: Example of the command CD

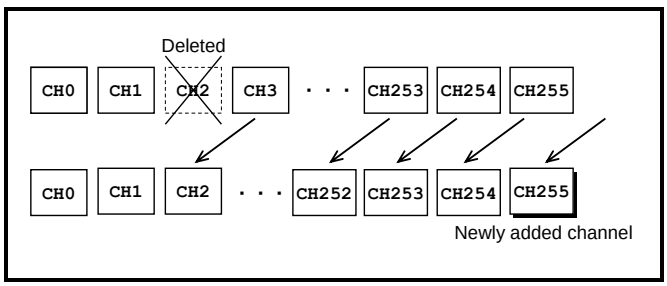

CH : Edit Channel

- Specifies a program channel to be edited.
  - ◊ Refer to "6.3.2.3. Programming" for details.

Category	Command
Format	**CH *data***
Data range	0 to 255 [Channel]
Condition	No programmed operation is being executed.

⚠ *Caution:Turn off the Motor servo when programming.*

CI : Insert Channel

- Inserts a new channel to the position of specified channel number.
  - ◊ Refer to "6.3.2.3. Programming" for details.
- When inserting a new channel to the position of channel number "n," the numbers of following channel goes down by one, thus eliminating the channel with the last channel number of 255.

Category	Command
Format	**CI *data***
Data range	0 to 255 [Channel]
Conditions to be met	No programmed positioning is performed.

- The figure below shows an example of the command CI3. .

Figure 9-3: Execution example of the command CI3

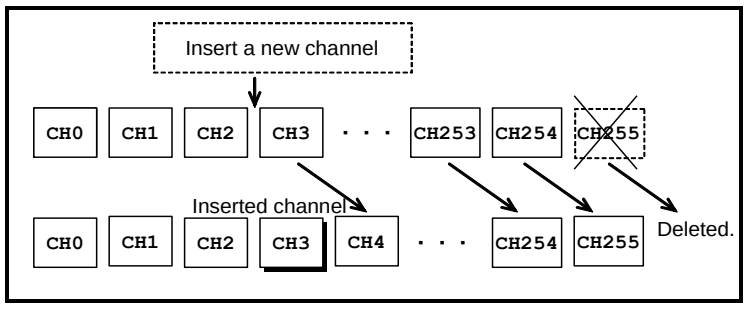

CK : System Clock

- Monitors the elapsed time from turning on the control power.
- The system clock is used for the time stamp for recording alarm histories.
  - ◊ Refer to "7.3.2.2. Monitor for Alarm History and Event: Monitor TA/HI" for details.

category	Monitor
Format	**CK**
Data range	00:00:00.0 to 595:13:30.4 [Time (minutes and seconds)] Limit: approximately 24 days.

CL : Clear Alarm

- Clears alarm and warning.
  - ◊ Refer to "11. Alarm and Warning" for warning.

Category	Command
Format	**CL**

P *CO : Position Error Counter Over Limit*

- Sets the threshold for the warning F1 (Excess position error).
  - ◊ Refer to "11.3.16. Warning F1: Excess Position Error" for warning of excess position error.
- The warning F1 occurs when the absolute value of position error counter is greater or equal to the setting value of parameter CO (|Value of position error counter| ≥ Value of parameter CO) At this moment the output WRN (Warning) opens.

Category	Parameter
Format	**CO *data***
Data range	1 to 2 621 439 [pulse]
Shipping set	200 000

★P *CR : Circular Resolution*

- In case of a positioning controlled by the pulse train input, this parameter sets the number of pulses that requires for one revolution of the Motor.
  - ◊ Refer to "6.3.3. Pulse Train Command Positioning Operation" for details.

Category	Parameter
Format	**CR *data***
Data range 1	0 : 5 242 880[pulse]for one revolution
Data range 2	1000 to 5 242 879 [count/revolution]
Shipping set	2 621 440

P *CSA : Acceleration Pattern Select*

- This parameter specifies an acceleration profiling of a positioning operation caused by the internal command (Positioning command, Jogging and home Return).
  - ◊ Refer to "8.6.1. Acceleration Profiling and Individual Acceleration Setting" for details.

Category	Parameter
Format	**CSA *data***
Data range	1 : Constant acceleration 2 : Modified sine 3 : Modified trapezoid 4 : Cycloid 5 : Half sine
Shipping set	1

P CSB : Deceleration Pattern Select

- This parameter specifies a deceleration profiling of a positioning operation caused by the internal command (Positioning command, Jogging and home Return).
  - ◊ Refer to "8.6.1. Acceleration Profiling and Individual Acceleration Setting" for the details.

Category	Parameter	
Format	**CSB *data***	
Data range 1	0	: Use the same profiling of the parameter CSA for deceleration
Data range 2	1 2 3 4 5	: Constant deceleration : Modified sine : Modified trapezoid : Cycloid : Half sine
Shipping set	0	

★P DBA : Analog Command Dead Band

- This parameter sets a dead band for the analog command input.

category	Parameter	
Format	**DBP *data***	
Data range 1	1 to 1023	
Data range 2	0	: Analog command dead band invalid
Data range 3	-1 to -1023	
Shipping set	0	

- ◊ When data>0, and when the absolute value of input voltage is less than voltage conversion value, the internal command will be 0.
- ◊ When data <0, the behavior will be as follows.
  1) when input voltage is equal to or higher than 0[V], internal command = input voltage + voltage conversion value
  2) when input voltage is 0[V], internal command will be 0.
  3) when input voltage is less than 0 [V], internal command = input voltage – voltage conversion value

- The voltage conversion value of the set value will be as shown below.

$$\text{Voltage conversion value of set value [V]} = \frac{10\ [V]}{32767} \times \text{data}$$

★P DBP : Dead Band

- This parameter sets a dead band for the deviation of the position loop.
  - ◊ If the position error is less or equal to the setting value, the internal velocity command becomes zero.
  - ◊ Refer to "8.5.3. Position Loop Dead Band" for details.

category	Parameter
Format	**DBP *data***
Data range	0 to 4095 [0.5 pulse]
Shipping set	0

- Setting unit of the dead band is a half of the resolution of position sensor (0.5 pulses).

P DC : RS-232C Direct Command

- This is used to input direct operation command through RS-232C in velocity control mode and torque control mode.
  - ◊ Since it has poor response performance, use this only for the operations in constant speed or constant torque or for such purposes as operation test of Motor.
  - ◊ For details, see "6.3.6.2. RS-232C Communication Operation."

category	Command
Format 1	**DC *data***
Data range 1	-32767～32767
Shipping set	0

- When this command is entered while analog command is valid (see AC command), "DC INHIBITED" will be displayed and the command will not be executed.
- The command value by this command will be cleared to "0" by following operations:
  1) Servo Off
  2) Emergency stop
  3) Over travel limit
  4) Control mode switching
  5) Analog command valid
  6) when MS command is executed, or STP input ON

★P DI : Direction Inversion

- This parameter switches the counting direction of position scale.
  - ◊ Refer to "6.2.2. Direction of Position Scale" for details.

Category	Parameter	
Format	**DI *data***	
Data range	0 1	: Counting up to the CW direction seen from the Motor output axis. : Counting up to the CCW direction seen from the Motor output axis
Shipping set	0	

- Direction setting of hardware travel limit and the phase of position feed back output signal do not reverse even the counting direction of the position scale data is reversed.

★P EC : End Code

- This parameter notifies to the communication terminal via RS-232C communication that an execution of positioning command or Home Return operation is completed and the System is ready for the next operation.
  - ◊ Refer to "6.3.5. RS-232C Communication Positioning Operation" for details.
- Outputs "**!**" (0x21) when the System is ready for the next operation.
  - ◊ When the System becomes ready for the next operation in the middle of editing characters, the notice will be sent to the communication terminal after completion of the current editing.

Category	Parameter	
format	**EC *data***	
Data range	0 1	: Does not notify. . Notifies to the communication terminal
Shipping set	0	

ED : (Factory use only)

- This monitor is for factory use only.

EDF : (Factory use only)

- This monitor is for factory use only.

EDV : (Factory use only)

- This monitor is for factory use only.

FACLR: Function ACLR

- This is to monitor the condition of the input ACLR (Alarm clear).
  - ◊ Refer to "7.1.2.Alarm Clear : ACLR" for details.
- The monitored state is after application of the parameters AB (Polarity) and NW (Anti-chattering timer) in the command PI (Edit input port).

Category	Monitor
Format	**FACLR**
Data range	0 : Off 1 : On

FBUSY: Function BUSY

- This is to monitor the state of output BUSY(In-operation).
  - ◊ Refer to "7.2.5. In-operation: BUSY" for details.
- For the monitored state, the parameters ST (Stability timer) and GC (Output logic) in the command PO (Edit output port) are not applied.

Category	Monitor
Format	**FBUSY**
Data range	0 : Idle state 1 : In operation

★ *FD : Feedback Direction Mode*

- This parameter sets the phase relation between the phase A and phase B of position feedback signal.

Category	Parameter
Format	**FD *data***
Data range	0 : Phase A is leading in the CW direction 1 : Phase B is leading in the CW direction.
Shipping set	0

FDIR: Function DIR

- Monitors the state of the input DIR (Jog direction).
  - ◊ Refer to "7.1.7. Jogging: JOG, Jogging Direction: DIR" for details.
- The monitored state is after application of the parameters AB (Polarity) and NW (Anti-chattering timer) in the command PI (Edit input port).

Category	Monitor
Format	**FDIR**
Data range	0 : + direction 1 : – direction

FDRDY: Function DRDY

- This is to monitor the state of the output DRDY (Driver Unit ready).
  - ◊ Refer to "7.2.1. Driver Unit Ready: DRDY" for details.
- For the monitored state, the parameters ST (Stability timer) and GC (Output logic) in the command PO (Edit output port) are not applied.

Category	Monitor
Format	**FDRDY**
Data range	0 : Alarm 1 : Normal

FEMST: Function EMST

- This is to monitor the state of the input EMST (Emergency stop).
  - ◊ Refer to "7.1.1. Emergency Stop: EMST" for details.
- The monitored state is after application of the parameters AB (Polarity) and NW (Anti-chattering timer) in the command PI (Edit input port).

Category	Monitor
Format	**FEMST**
Data range	0 : Normal 1 : Emergency stop

★P *FF : Feed Forward Gain*

- Sets the feed forward gain.
  - ◊ For details, refer to "8.5.1. Servo Block Diagram."

Category	Parameter
Format	**FF*data***
Data range	0.0000 to 1.0000
Shipping set	1.0000

- The feed forward control is deactivated when the parameter FF0 is specified.

FHCMP: HCMP Output Function Readout

- HCMP output: This is to read out the state of Home Position Defined.
  - ◊ Refer to "8.3.6. Home Position Defined: HCMP" for details.
- The state that is read out does not reflect the application of Parameter ST: State stabilization Timer in Command PO: Control Output Function Edition, or Parameter GC: Output Logic.

Category	Monitor	
Format	**FCMP**	
Data range	0	: Home Position Undefined
	1	: Home Position Defined

FHLD: Function HLD

- This is to monitor the state of input HLD (Hold).
  - ◊ Refer to "8.2.1. Input HOLD: HLD" for details.
- The monitored state is after application of the parameters AB (Polarity) and NW (Anti-chattering timer) in the command PI (Edit input port).

Category	Monitor	
Format	**FHLD**	
Data range	0	: Normal
	1	: On hold

FHLS: Function HLS

- HLS input: This is to monitor the state of Home Position Limit.
  - ◊ For details, see "8.2.5 Home Position Limit: HLS."
- The monitored state is after application of the parameters AB (Input Contact) and NW (Anti-chattering timer) in the command PI (Edit input port).

Category	Monitor	
Format	**FHLS**	
Data range	0	: Normal
	1	: Near Home Position Detection

FHOME: Function Home

- This is to monitor the state of Home Return Completed.
  - ◊ Refer to "8.3.5. Home Return Completed: HOME" for details.
- The monitored state does not reflect the application of the parameters ST (State Stabilization Timer) and Parameter GC (Output Logic) in the command PO (Control Output Function Edition).

Category	Monitor	
Format	**FHOME**	
Data range	0	: Home Return Not Completed, or Command Position is not Home.
	1	: Home Return Completed and Command Position retains Home.

FHOS: Function HOS

- This is to monitor the state of Home Return Start.
  - ◊ Refer to "8.2.4. Home Return Start: HOS" for details.
- The monitored state is after application of the parameters AB (Input Contact) and parameters NW (Anti-chattering timer) in the command PI (Edit input port).

Category	Monitor	
Format	**FHOS**	
Data range	**0** 1	: Invalid : Home Return Start

FIOFF: Function IOFF

This is to monitor the state of the input IOFF (Integration off).

- ◊ Refer to "8.2.3. Integration Off: IOFF" for details.

- The monitored state is after application of the parameters AB (Polarity) and NW (Anti-chattering timer) in the command PI (Edit input port).

Category	monitor	
Format	**FIOFF**	
Data range	0 1	: Normal : Integration control off

FIPOS: Function IPOS

- This is to monitor the state of the output IPOS (In-position).
  - ◊ Refer to "7.2.6. In-position: IPOS" for details.
- For the monitored state, the parameters ST (Stability timer) and GC (Output logic) in the command PO (Edit output port) are not applied.

Category	Monitor	
Format	**FIPOS**	
Data range	0 1	: Positioning is not yet completed, or loss of the target position : Positioning is completed and the target position is secured.

FJOG: Function JOG

- This is to monitor the state of the input JOG (Jogging).
  - ◊ Refer to "7.1.7. Jogging: JOG Jogging Direction: DIR" for details.
- The monitored state is after application of the parameters AB (Polarity) and NW (Anti-chattering timer) in the command PI (Edit input port).

Category	Monitor	
Format	**FJOG**	
Data range	0 1	: Starting deceleration : Starting acceleration

P FK : Feedback Coordinate

- This is to monitor the total number of signal edge count of the phase A and B pulses of the position feedback signals.
  - ◊ Refer to "7.3.4.Position Feedback Signal Counter: Monitor FK" for details.
  - ◊ This is to check the number of position feedback signal output pulses from the Driver Unit.
- The monitor FK requires setting of data value.
  - ◊ Reset to the number of pulses to zero at the binging of edge counting, thus enabling to monitor the total number of signal edge count since then.

Category	monitor
Format	**FK**
Data range	<Indication> –2 147 483 648 to 2 147 483 647 [count] <Input> –2 147 483 647 to 2 147 483 647 [count] : Setting zero (0) to the data resets the monitoring data.

★★ FM : (Factory use only)

- This is the parameter for the factory use only. Do not change the setting.

FNEARA: Function NEARA

- This is to monitor the state of the output NEARA (Target proximity A).
  - ◊ Refer to "7.2.7. Target Proximity: NEARA and NEARB" for details.
- For the monitored state, the parameters ST (Stability timer) and GC (Output logic) in the command PO (Edit output port) are not applied.

Category	Monitor
Format	**FNEARA**
Data range	0 : Not detected 1 : Nearing to the final target position

FNEARB: Function NEARB

- This is to monitor the state of the output NEARB (Target proximity B).
  - ◊ Refer to "7.2.7. Target Proximity: NEARA and NEARB" for details.
- For the monitored state, the parameters ST (Stability timer) and GC (Output logic) in the command PO (Edit output port) are not applied.

Category	Monitor
Format	**FNEARB**
Data range	0 : Not detected. 1 : Nearing to the final target position.

FNRM: Function NRM

- This is to monitor the state of the output NRM (Normal).
  - ◊ Refer to "8.3.4. Output Normal: NRM" for details.
- For the monitored state, the parameters ST (Stability timer) and GC (Output logic) in the command PO (Edit output port) are not applied.

Category	Monitor
Format	**FNRM**
Data range	0 : Alarm or warning 1 : Normal

P *FO : Low-pass Filter off Velocity*

- This parameter deactivates the low-pass filter to the torque command, when the Motor velocity is less or equal to the specified value.
  - ◊ Refer to "8.5.1. Servo Block Diagram" for details.
  - ◊ There are two levels of the low-pass filter: the parameters FP (Primary low-pass filter) and FS (Secondary low-pass filter).
- Setting of the low-pass filter enables to decrease the resonance level without hampering the settling time.

Category	Parameter	
Format	**FO *data***	
Data range 1	0.000	: Low-pass filter is always effective.
Data range 2	0.001 to 10.000 [s^{-1}]	: Low-pass filter is off when the velocity is less or equal to the specified value.
Shipping set	0.000	

Figure 9-4: Example of command FO

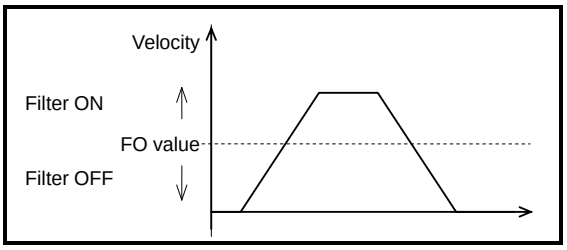

FORD: Function ORD

- This is to monitor the state of the input ORD (Velocity override).
  - ◊ Refer to "8.2.2. Velocity Override: ORD" for details.
- The monitored state is after application of the parameters AB (Polarity) and NW (Anti-chattering timer) in the command PI (Edit input port).

Category	Monitor
Format	**FORD**
Data range	0 : Normal 1 : Override

FOTM: Function OTM

- This is to monitor the state of the input OTM (Travel limit, – direction).
  - ◊ Refer to "7.1.3. Hardware Over Travel Limit: OTP and OTM" for details.
- The monitored state is after application of the parameters AB (Polarity) and NW (Anti-chattering timer) in the command PI (Edit input port).

Category	Monitor	
Format	**FOTM**	
Data range	0 1	: Limit is not detected. : Limit is detected.

FOTMA: Function OTMA

- This is to monitor the state of the output OTMA (Travel limit detection, – direction).
  - ◊ Refer to "7.2.3. Over Travel Limit Direction: OTPA and OTMA" for details.
- For the monitored state, the parameters ST (Stability timer) and GC (Output logic) in the command PO (Edit output port) are not applied.

Category	Monitor	
Format	**FOTMA**	
Data range	0 1	: Normal : Limit in the minus direction is detected.

FOTP: Function OTP

- This is to monitor the state of the input OTP (Travel limit, + direction).
  - ◊ Refer to "7.1.3. Hardware Over Travel Limit: OTP and OTM" for details.
- The monitored state is after application of the parameters AB (Polarity) and NW (Anti-chattering timer) in the command PI (Edit input port).

Category	Monitor	
Format	**FOTP**	
Data range	0 1	: Limit is not detected. ; Limit is detected.

FOTPA: Function OTPA

- This is to monitor the output OTPA (Travel limit detection + direction).
  - ◊ Refer to "7.2.3.Over Travel Limit Direction: OTPA and OTMA" for details.
- For the monitored state, the parameters ST (Stability timer) and GC (Output logic) in the command PO (Edit output port) are not applied.

Category	Monitor	
Format	**FOTPA**	
Data range	0 1	: Normal : Limit in the plus direction is detected.

FOTXA: Function OTXA

- This is to monitor the output OTXA (Travel limit detection +/- direction).
  - ◊ Refer to "8.3.3. Travel Limit Output (±): OTXA" for details.
- For the monitored state, the parameters ST (Stability timer) and GC (Output logic) in the command PO (Edit output port) are not applied.

Category	Monitor
Format	**FOTXA**
Data range	0 : Not detected 1 : Limit is detected.

P *FP : Low-pass Filter, Primary*

- This parameter sets the low-pass filter against the torque command.
  - ◊ Refer to "8.5.2. Digital Filter" for details.

Category	Parameter
Format	**FP *data***
Data range 1	0 : Primary low-pass filter is OFF.
Data range 2	10 to 1000 [Hz]
Shipping set	0

- This parameter will be automatically set by an automatic tuning caused by the command AT (Automatic turning).

FPRG0 to 7: Function PRG0 to 7

- This is to monitor the state of the inputs PRG0 to 7 (Internal program channel selection, 0 to 7).
  - ◊ Refer to "7.1.5. Program Start: RUN, Internal Program Channel Selection: Input PRG0 to PRG7" for details.
- The monitored state is after application of the parameters AB (Polarity) and NW (Anti-chattering timer) in the command PI (Edit input port).

Category	Monitor
Format	**FPRG0 to 7**
Data range	0 : Channel number 0 1 : Channel number 1

P *FQ : Observer Q Filter*

- This parameter sets the observer frequency.
  - ◊ Refer to "8.5.1. Servo Block Diagram" for details.

Category	Parameter
Format	**FQ *data***
Data range 1	0 : Observer OFF.
Data range 2	1 to 300 [Hz]
Shipping set	10

- If the observer is set to off (FQ0), the Motor will not reach to the target position.

★ *FR : Feedback Signal Resolution*

- This parameter sets the resolution of the phase A and phase B of the position feedback signal.
  - ◊ Refer to "7.2.8. Position Feedback Signal" for details.
  - ◊ This will set the total number of edge count of the phase A and B pulses for one Motor revolution

Category	Parameter
Format	**FR *data***
Data range 1	0 : Output of the phases A and B of position feedback is OFF.
Data range 2	1 to 5 242 880 [count/revolution]
Shipping set	81 920

- Setting of the parameter FR automatically sets the parameter VL (Velocity limiter).
  - ◊ The limitation on the velocity is to control the frequency of the position feedback signal not to exceed 781 [kHz].

FRUN: Function RUN

- This is to monitor the state of the input RUN (Positioning start).
  - ◊ Refer to "7.1.5. Program Start: RUN, Internal Program Channel Selection: Input PRG0 to PRG7" for details.
- The monitored state is after application of the parameters AB (Polarity) and NW (Anti-chattering timer) in the command PI (Edit input port).

Category	Monitor
Format	**FRUN**
Data range	0 : OFF 1 : ON

P *FS : Low-pass Filter, Secondary*

- Sets the low-pass filter to the torque command.
  - ◊ Refer to "8.5.2. Digital Filter" for details.

Category	Parameter
Format	**FS *data***
Data range 1	0 : Secondary low-pass filter is OFF.
Data range 2	10 to 1000 [Hz]
Shipping set	0

- This parameter will be automatically set by an execution of the command AT (Automatic tuning).

FSTP: Function STP

- This is to monitor the state of the input STP (Stop).
  - ◊ Refer to "7.1.6. Stop: STP" for details.
- The monitored state is after application of the parameters AB (Polarity) and NW (Anti-chattering timer) in the command PI (Edit input port).

Category	Monitor	
Format	**FSTP**	
Data range	0 1	: Operation available. : Start deceleration, and operation prohibited.

FSVON: Function SVON

- This is to monitor the state of the input SVON (Servo on).
  - ◊ Refer to "7.1.4. Servo on: SVON" for details.
- The monitored state is after application of the parameters AB (Polarity) and NW (Anti-chattering timer) in the command PI (Edit input port).

Category	Monitor	
Format	**FSVON**	
Data range	0 1	: Servo OFF. : Servo ON.

FSVST: Function SVST

- This is to monitor the state of the output SVST (Servo state).
  - ◊ Refer to "7.2.4. Servo state: SVST" for details.
- For the monitored state, the parameters ST (Stability timer) and GC (Output logic) in the command PO (Edit output port) are not applied.

Category	Monitor	
Format	**FSVST**	
Data range	0 1	: Servo OFF : Servo ON

FTEO: Function TEO

- This is to monitor the state of the output TEO (Tell position error, over).
  - ◊ Refer to "8.3.2.1. Position Error: TEU (Position Error, Under) and TEO (Position Error, Over)" for details.
- For the monitored state, the parameters ST (Stability timer) and GC (Output logic) in the command PO (Edit output port) are not applied.

Category	Monitor	
Format	**FTEO**	
Data range	0 1	: Not detected. : Position error is greater or equal to the threshold.

FTEU: Function TEU

- This is to monitor the state of the output TEU (Tell position error, under).
  - ◊ Refer to "8.3.2.1. Position Error: TEU (Position Error, Under) and TEO (Position Error, Over)" for details.
- For the monitored state, the parameters ST (Stability timer) and GC (Output logic) in the command PO (Edit output port) are not applied.

Category	Monitor	
Format	**FTEU**	
Data range	0	: Not detected
	1	: Position error is less or equal to the threshold.

FTJO: Function TJO

- This is to monitor the state of the output JO (Thermal loading, under).
  - ◊ Refer to "8.3.2.5. Thermal Loading: Outputs TJU (Thermal Loading, Under) and TJO (Thermal Loading, Over)" for details.
- For the monitored state, the parameters ST (Stability timer) and GC (Output logic) in the command PO (Edit output port) are not applied.

Category	Monitor	
Format	**FTJO**	
Data range	0	: Not detected
	1	: Thermal loading is less or equal to the threshold.

FTJU: Function TJU

- This is to monitor the state of the output TJU (Tell thermal, under).
  - ◊ Refer to "8.3.2.5. Thermal Loading: Outputs TJU (Thermal Loading, Under) and TJO (Thermal Loading, Over)" for details.
- For the monitored state, the parameters ST (Stability timer) and GC (Output logic) in the command PO (Edit output port) are not applied.

Category	Monitor	
Format	**FTJU**	
Data range	0	: Not detected
	1	: Thermal loading is less or equal to the threshold.

FTTO: Function TTO

- This is to monitor the state of the output TTO (Tell torque command, over).
  - ◊ Refer to "8.3.2.4. Torque Command: Outputs TTU (Torque Command, Under) and TTO (Torque Command, Over)" for details.
- For the monitored state, the parameters ST (Stability timer) and GC (Output logic) in the command PO (Edit output port) are not applied.

Category	Monitor	
Format	**FTTO**	
Data range	0 1	: Not detected : Torque command is greater or equals to the threshold.

FTTU: Function TTU

- This is to monitor the state of the output TTU (Tell torque command, under).
  - ◊ Refer to "8.3.2.4. Torque Command: Outputs TTU (Torque Command, Under) and TTO (Torque Command, Over)" for details.
- For the monitored state, the parameters ST (Stability timer) and GC (Output logic) in the command PO (Edit output port) are not applied.

Category	Monitor	
Format	**FTTU**	
Data range	0 1	: Not detected. ; Torque command is less or equal to the threshold.

FTVEO: Function TVEO

- This is to monitor the state of the output TVEO (Tell velocity error, over).
  - ◊ Refer to "8.3.2.2. Velocity: Outputs TVEU (Velocity Error, Under) and TVEO (Velocity Error, Over)" for details.
- For the monitored state, the parameters ST (Stability timer) and GC (Output logic) in the command PO (Edit output port) are not applied.

Category	Monitor	
Format	**FTVEO**	
Data range	0 1	; Not detected : Velocity error is greater or equal to the threshold.

FTVEU: Function TVEU

- This is to monitor the state of the output TVEU (Tell velocity error, under).
  - ◊ Refer to "8.3.2.2. Velocity: Outputs TVEU (Velocity Error, Under) and TVEO (Velocity Error, Over)" for details.
- For the monitored state, the parameters ST (Stability timer) and GC (Output logic) in the command PO (Edit output port) are not applied.

Category	Monitor	
Format	**FTVEU**	
Data range	0 1	: Not detected : Velocity error is less or equal to the threshold.

FTVO: Function TVO

- This is to monitor the state of the output TVO (Tell velocity error, over).
  - ◊ Refer to "8.3.2.3. Velocity: Outputs TVU (Velocity, Under) and TVO (Velocity, Over)" for details.
- For the monitored state, the parameters ST (Stability timer) and GC (Output logic) in the command PO (Edit output port) are not applied.

Category	Monitor	
Format	**FTVO**	
Data range	0 1	: Not detected. : Velocity error is less or equal to the threshold.

FTVU: Function TVU

- This is to monitor the state of the output TVU (Tell velocity error, under).
  - ◊ Refer to "8.3.2.3. Velocity: Outputs TVU (Velocity, Under) and TVO (Velocity, Over)" for details.
- For the monitored state, the parameters ST (Stability timer) and GC (Output logic) in the command PO (Edit output port) are not applied.

Category	Monitor	
Format	**FTVU**	
Data range	0 1	: Not detected : Velocity error is less or equal to the threshold.

FWRN: Function WRN

- This is to monitor the state of the output WRN (Warning).
  - ◊ Refer to "7.2.2. Warning: WRN" for details.
- For the monitored state, the parameters ST (Stability timer) and GC (Output logic) in the command PO (Edit output port) are not applied.

Category	Monitor	
Format	**FWRN**	
Data range	0 1	: Normal : Warning

FZONEA: Function ZONEA

- This is to monitor the state of the output ZONEA (Zone A).
  - ◊ Refer to "8.3.1. In-zone Output: ZONEA, ZONEB, and ZONEC" for details.
- For the monitored state, the parameters ST (Stability timer) and GC (Output logic) in the command PO (Edit output port) are not applied.

Category	Monitor	
Format	**FZONEA**	
Data range	0 1	: Not detected : Detected Zone A

FZONEB: Function ZONEB

- This is to monitor the state of the output ZONEB (Zone B).
  - ◊ Refer to "8.3.1. In-zone Output: ZONEA, ZONEB, and ZONEC" for details.
- For the monitored state, the parameters ST (Stability timer) and GC (Output logic) in the command PO (Edit output port) are not applied.

Category	Monitor	
Format	**FZONEB**	
Data range	0 1	: Not detected. : Detected Zone B

FZONEC: Function ZONEC

- This is to monitor the state of the output ZONEC (Zone C).
  - ◊ Refer to "8.3.1. In-zone Output: ZONEA, ZONEB, and ZONEC" for details.
- For the monitored state, the parameters ST (Stability timer) and GC (Output logic) in the command PO (Edit output port) are not applied.

Category	Monitor	
Format	**FZONEC**	
Data range	0 1	: Not detected : Detected Zone C

P FW : Fin Width

- This parameter sets the notice mode of the output IPOS (In-position).

  ◊ Refer to "7.2.6. In-position: IPOS" for details.

- For the output IPOS, there are three notice modes set by the parameter FW (Fin width).

  1) CFIN mode
  After starting a positioning operation, the output IPOS opens for a time set by the parameter FW at earliest. After completion of a positioning, the Driver Unit holds the signal for completion of a positioning.

  2) IPOS mode
  After completion of a positioning, the System outputs the completion signal depending on the state of position error.

  3) FIN mode
  After completion of a positioning, the System outputs the pulsing completion signal. The time width of the completion signal is specified by the parameter FW.

Category	Parameter	
Format	**FW *data***	
Data range 1	–0.1 to –10 000.0 [ms]	: CFIN mode
Data range 2	0.0	: IPOS mode
Data range 3	0.1 to 10 000.0 [ms]	: FIN mode
Shipping set	–1.0	

★P FZ : Feedback Phase Z Configuration

- The parameter sets the output signal format of Phase Z of the position feedback signal.

  ◊ Refer to "7.2.8. Position Feedback Signal" for details.

Category	Parameter	
Format	**FZ *data***	
Data range	0 1	: Phase Z format : MSB format
Shipping set	0	

P GP : Gain Switching Point

- The parameter sets the threshold of position error for the automatic gain switching function.

  ◊ Refer to "8.5.4. Automatic Gain Switching" for details.

- It switches the gain for Motor stationary level when the position error is less or equal to the setting of parameter GP for a time set by the parameter GT (Switching gain timer).

Category	Parameter	
Format	**GP *data***	
Data range 1	0	: Gain switching function is off.
Data range 2	1 to 2 621 439 [pulse]	: Position error threshold for gain switching
Shipping set	0	

P GT : Switching Gain Timer

- The parameter is the stability timer for position error to switch the gain in the automatic gain switching function.
  - ◊ Refer to "8.5.4. Automatic Gain Switching" for details.
- It switches the gain for Motor stationary level when the position error is less or equal to the setting of parameter GP (Gain switching point) for a time set by the parameter GT.

Parameter	Parameter
Format	**GT *data***
Data range	0.0 to 10 000.0 [ms]
Shipping set	0.0

P HA : Home Return Acceleration

- Sets the acceleration for Home Return operation.
  - ◊ Refer to "8.8. Home Return" for details.

Category	Parameter
Format	**HA *data***
Data range	0.1 to 800.0 [s^{-2}]
Shipping set	1.0

P HB : Home Return Deceleration

- Sets the deceleration for Home Return.
  - ◊ Refer to "8.8. Home Return" for details.

Category	Parameter
Format	**HB *data***
Data range 1	0.0 : Use the same value as the parameter HA.
Data range 2	0.1 to 800.0 [s^{-2}]
Shipping set	0.0

★ P HD : Home Return Direction

- Sets the direction of Home Return.
  - ◊ Refer to "8.8. Home Return" for details.

Category	Parameter
Format	**HD *data***
Data range	0 : Home Return starts in the plus direction 1 : Home Return starts in the minus direction
Shipping set	1

- Setting of the parameter HD will be effective for the next Home Return operation.

★P HO : Home Offset

- Sets the rotation amount from the home position limit switch to a point to be the actual home position (or the position of the first øZ signal after detection of the home limit switch).
  - ◊ Refer to "8.8. Home Return" for details.

Category	Parameter	
Format 1	**HO *data***	
Format 2	**HO /ST**	: Teaching of rotational amount and direction to the home position limit switch.
Data range	0 to ± 262 144 000 [pulse]	: The + sign is the Home Return direction for the parameter HD. The – sign is the opposite Home Return direction for the parameter HD
Shipping set	0	
Conditions to be met	<Teaching by the parameter HO/ST> • Home Return operation or execution of the command HS/LS is completed. • The same HD and OS for the time of execution of Home Return operation.	

- For the teaching of the offset by the parameter HO/ST, it shall be executed by rotating the Motor to the desired position for home position after execution of the command HS/LS (Adjust of home position limit).
  - ◊ Refer to "8.8.5. Teaching of Home Position Offset" for details.
  - ◊ The rotation amount and direction will be taught to the System. (Exceeding one revolution for the rotation amount is acceptable.)

P HS : Home Return Start

- Home Return operation starts in accordance with the parameter OS (Home Return mode).
  - ◊ Refer to "8.8. Home Return" for details'.
  - ◊ An operation for adjusting position of the home limit sensor is also available.

Category	Command	
Format 1	**HS**	: Starts Home Return operation.
Format 2	**HS /LS**	: Operation for adjusting position of the home position limit sensor
Conditions to be met	• The Motor servo must be on. • Positioning operation caused by an internal command (Positioning command, Jogging and Home Return) is not executed. • The Motor is not stopping by an alarm or warning. • The input STP (Stop) is not activated.	

- In case of adjusting the position of home limit sensor by the command HS/LS, the Home Return operation starts and completes without making a rotation for the parameter HO (Home offset).

P HV : Home Return Velocity

- Specifies the velocity for the Home Return operation.
  - ◊ Refer to "8.8. Home Return" for details.
  - ◊ The maximum rotational speed for individual Motors, refer to "2.5. Motor Specifications."

Category	Parameter
Format	**HV *data***
Data range	0.001 to 10.000 [s^{-1}]
Shipping set	0.200

- A change in the parameter HV during the Home Return operation is the real time execution to the velocity.

P HZ : Home Return Near-zero Velocity

- Specifies the velocity for searching home limit position and nearing to the øZ signal.
  - ◊ Refer to "8.8. Home Return" for details.
  - ◊ This velocity is also used for the command IZ (Incremental positioning, phase Z).

Category	Parameter
Format	**HZ *data***
Data range	0.001 to 0.200 [s^{-1}]
Shipping set	0.010

- A change in the parameter HV during the Home Return operation is the real tine execution to the velocity.

P ID : Incremental Positioning, Degree

- Performs an incremental positioning operation in units of degree.
  - ◊ Refer to "6.3.1. Positioning Command" for details.

Category	Command
Format	**ID *data***
Data range	0 to ± 3 600 000 [0.01°] : + sign for the plus direction : – sign for the minus direction
Conditions to be met	The Motor servo must be on. Positioning operation caused by an internal command (Positioning command, Jogging and Home Return) is not executed. The Motor is not stopping by an alarm or warning. The input STP (Stop) is not activated.

- The monitor TD (Tell position, degree unit) reports the current position in units of degree.

P IN : IN-position Limit

- Sets the criterion for outputting the In-position signal (In-position limit).
  - ◊ Refer to "7.2.6. In-position: IPOS" for details.
- The output IPOS (In-position) activates when the absolute values of the position error counter is stable within the setting range of the parameter IN (In-position limit) for the time specified in the parameter IS (In-position stability timer).

Category	Parameter
Format	**IN *data***
Data range	0 to 2 621 439 [pulse]
Shipping set	400

IO0 : Input/Output Monitor 0 (Electrical condition)

- Monitors electrical conditions of the connector CN2 (Input/output signal connector).
  - ◊ Indicates the condition by zeros (0) and ones (1) to each signal port.
  - ◊ Refer to ”7.3.1.1. Electrical Condition Monitor: Monitor IO0” for details.

Category	Monitor	
Format	**IO0**	
Data range	0 1	: Input OFF , Output Open : Input ON, Output Closed

IO1 : Input/Output Monitor 1 (Internal recognition)

- Monitors the application state of function to the connector CN2 (Control inputs and outputs signal connector): the polarity reverse and the anti-chattering timer to the control inputs, and the stability timer for the control outputs.
  - ◊ Indicates the condition by zeros (0) and ones (1) to each signal port.
  - ◊ Refer to ”7.3.1.2. Monitor for Internal Recognition of Input and Output State: Monitor IO1” for details.

Category	Monitor	
Format	**IO1**	
Data range	0 1	: Input [Not functioning], Output [Not detect the state] : Input [Functioning], Output [Detect the state]

IO2 : Input/Output Monitor 2 (State of input function)

- Monitors the application state of input functions of the CN2 connector in a line.
  The readout is the recognition of Driver Unit.
  - ◊ Indicates the state by zeros (0) and ones (1) to each function.
  - ◊ Refer to ”7.3.1.3. Monitor for State of Input Functions: Monitor IO2”
- The readout is the application state of the parameters AB (Input polarity) and NW (Anti-chattering timer) in the command PI (Edit control input).

Category	Monitor	
Format	**IO2**	
Data range	0 1	: Not functioning : Functioning

IO3 : Input/Output Monitor 3

- Monitors the application state of output function of the CN2 connector.
  - ◊ Indicates the state by zeros (0) and ones (1) to each function.
  - ◊ Reef to “7.3.1.4. Monitor for State of Output Functions: IO3” for details.
- The parameter ST (Condition stability timer) and the parameter QC (Output logic) in the command PO (Edit output port) are not applied to the readout.

Category	Monitor	
Format	**IO3**	
Data range	0 1	: Not detect the state : Detect the state

P IQ : Incremental Positioning, User

- The command executes an incremental positioning.
  - ◊ Refer to "6.3.1. Positioning Command" and "8.6.4. User Scale Positioning" for details.
- The position is performed in the position scale based on the dividing number of total circumference specified by the parameter QR (Dividing number, user scale).

Category	Command
Format	**IQ *data***
Data range	0 to ± Parameter QR × 100 : + sign to rotate in the plus direction [360°/Prameter QR] : – sign to rotate in the minus direction
Conditions to be met	• The Motor servo must be on. • Positioning operation caused by an internal command (Positioning command, Jogging and Home Return) is not executed. • The Motor is not stopping by an alarm or warning. • The input STP (Stop) is not activated.

- The monitor TQ (Tell position, QR unit) reads out the current position in units of QR.

P IR : Incremental Positioning, Resolver

- Performs an incremental positioning
  - ◊ Refer to "6.3.1. Positioning Command" for details.

Category	Command
Format	**IR *data***
Data range	0 to ± 262 144 000[pulse] : + sign to rotate in the plus direction. : – sign to rotate in the minus direction
Conditions to be met	• The Motor servo must be on. • Positioning operation caused by an internal command (Positioning command, Jogging and Home Return) is not executed. • The Motor is not stopping by an alarm or warning. • The input STP (Stop) is not activated.

- The monitor TP (Tell position, pulse unit) reads out the current position in units of pulse.

P IS : In-position Stability Timer

- Sets the time length to confirm that the position error is stabilized at the completion of positioning.
  - ◊ Refer to "7.2.6. In-position: IPOS" for details.
- The output IPOS (In-position) activates when the absolute values of the position error counter is stable within the setting range of the parameter IN (In-position limit) for the time specified in the parameter IS (In-position stability timer).

Category	Parameter
Format	**IS *data***
Data range	0.0 to 10 000.0 [ms]
Shipping set	0.0

IU : (Factory use only)

- This is the monitor dedicated to the factory use.

IUC : (Factory use only)

- This is the monitor dedicated to the factory use.

IUE : (Factory use only)

- This is the monitor dedicated to the factory use.

IV : (Factory use only)

- This is the monitor dedicated to the factory use.

IVC : (Factory use only)

- This is the monitor dedicated to the factory use.

IVE: (Factory use only)

- This is the monitor dedicated to the factory use.

IW : (Factory use only)

- This is the monitor dedicated to the factory use.

IWC : (Factory use only)

- This is the monitor dedicated to the factory use.

IWE : (Factory use only)

- This is the monitor dedicated to the factory use.

P *IZ : Incremental Positioning, Phase Z*

- Executes a positioning in the specified direction to the nearest phase Z from the current position.
- If the current position is the same as the above described position, no positioning will be performed. (Only outputs the confirm signal for the completion of positioning.

Category	Command
Forma	**IZ *data***
Data range	1 : Positioning to the nearest phase Z in the plus direction. – 1 : Positioning to the nearest phase Z in the minus direction.
Conditions to be met	The Motor servo must be on. Positioning operation caused by an internal command (Positioning command, Jogging and Home Return) is not executed. The Motor is not stopping by an alarm or warning. The input STP (Stop) is not activated.

- The velocity follows the setting of the parameter HZ (Home return near-zero velocity).

P JA : Jog Acceleration

- Specifies the acceleration in jogging operation.
  - ◊ Refer to "6.3.4. Jogging" for details.

Category	Parameter
Format	**JA *data***
Data range	0.1 to 800.0 [s^{-2}]
Shipping set	1.0

P JB : Jog Deceleration

- Specifies the deceleration in jogging operation.
  - ◊ Refer to "6.3.4. Jogging" for details.

Category	Parameter	
Format	**JB *data***	
Data range 1	0.0	: Use the same value as the parameter JA.
Data range 2	0.1 to 800.0 [s^{-2}]	
Shipping set	0.0	

JG : Jog

- Executes a jogging operation via the RS-232C communication.
  - ◊ Refer to "6.3.4.2. Jogging via RS-232C Communication" for details.

Category	Command	
Format 1	**JG /PL**	: Jogging in the plus direction
Format 2	**JG /MI**	: Jogging in the minus direction
Conditions to be met	• The Motor servo must be on. • Positioning operation caused by an internal command (Positioning command, Jogging and Home Return) is not executed. • The Motor is not stopping by an alarm or warning. • The input STP (Stop) is not activated.	

- After input of the command JG, repetitive input of the [ENT] key with the interval of less than 0.5 seconds repeats a jogging operation.
  - ◊ If an input of the [ENT] key pauses for 0.5 seconds or longer, or an ineffective key is inputted, the Motor decelerates and stops.

P ex. JP : Jump

- If a channel with the parameter JP is executed, program processing jumps the top line of program channel specified by the data of the parameter JP.
  - ◊ Refer to "6.3.2.4. Program Sequence" for details.

Category	Parameter
Format	**JP *data***
Data range	0 to 255 [channel]
Shipping set	0

- When input the command "?JP", it reads out the channel number currently processed.
  - ◊ When the parameter OE (Sequence code) is OE1 and the System is waiting for execution of the next program, the monitor reports the channel number to be processed.

P JV : Jog Velocity

- Specifies the velocity in the jogging operation.
  - ◊ Refer to "6.3.4. Jogging" for details.
  - ◊ The maximum rotational speed for individual Motor, refer to "2.5. Motor Specifications."

Category	Parameter
Format	**JV *data***
Data range	0.001 to 10.000 [s^{-1}]
Shipping set	0.100

- A change in the parameter JV during jogging operation is the real time execution to the velocity.

P KB : Kill Brake

- This parameter terminates the dynamic brake function.
  - ◊ Refer to "8.4.1. Preparation for Teaching" for details.
- This is to decrease rotational resistance when turning the rotor manually in case of teaching operation.

Category	Parameter (The EEPROM does not back up the setting of this parameter.
Format	**KB *data***
Data range	0 : Dynamic brake effective 1 : Dynamic brake ineffective
Shipping set	0

- When the servo is turned off because of an alarm, the dynamic brake function is always effective regardless of the setting of parameter KB.

P LB : Observer Limiter

- When the input IOFF (Integration OFF) is activated, this parameter limits the observer output to a specified percentage.
  - ◊ Refer to "8.2.3. Integration OFF: IOFF" and "8.5.1. Servo Block Diagram" for details.
- When the observer output is set to 0%, the effect of integral control is nullified, thus cancelling settling motion to the target position.

Category	Parameter
Format	**LB *data***
Data range	0.00 to 100.00%
Shipping set	0.00

P LG : Lower Gain (When the input IOFF is ON)

- This parameter lowers the position loop proportional gain to a specified percent when the input IOFF (Integration OFF) is ON.

  ◊ Refer to "8.2.3. Integration off: IOFF" and "8.5.1. Servo Block Diagram" for details.

Category	Parameter
Format	**LG *data***
Data range	0.00 to 100.00[%]
Shipping set	50.00

P LM : LED Mode

- This parameter monitors the state of connector CN2 (Control input/output connector) via 7 segments LED.

Category	Parameter	
Format	**LM *data***	
Data range	0	: Normal mode
	1	: Displays state of control output signal.
	2	: Displays state of control input signal.
Shipping set	0	

- The parameter LM1 displays the state after application of the parameter ST (Stability timer).
- The parameter LM2 displays the state after application of the parameter AB (Input port polarity) and the parameter NW (Anti-chattering stability timer).
- POWER LED turns to red in case of an alarm regardless the display mode.

Figure 9-5: Display of LED for state of control Input/Ouput

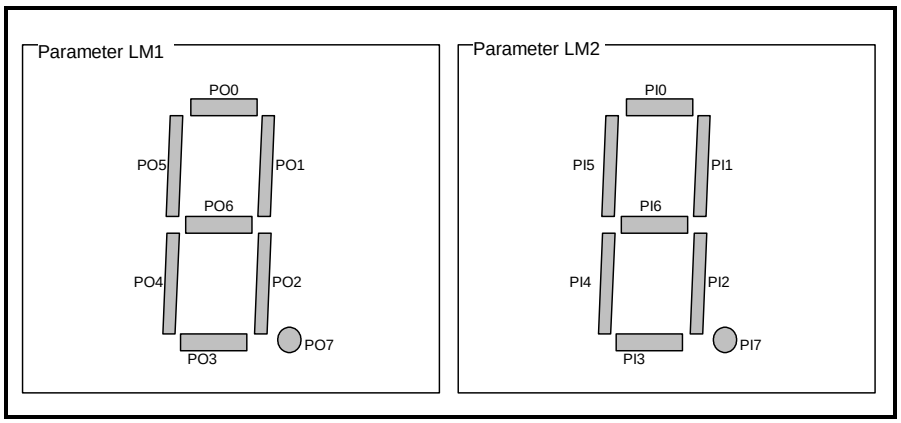

★P LO : Load Inertia

- Sets the load moment of inertia of the Motor.
  - ◊ Refer to "5.3.1. Input of Load moment of Inertia" for details
- Be sure to specify the load inertia to improve the follow-up capability to a motion command and the settling time at the end of a positioning.

Category	Parameter
Format	**LO *data***
Data range	0.000 to 4 000.000 [kg·m^2]
Shipping set	0.000

- Change of the parameter LO clears the parameter SG (Servo gain) to zero.

P MA : Move Acceleration

- Sets the acceleration for positioning control operation.
  - ◊ Refer to "6.3. 1. Positioning Command."

Category	Parameter
Format	**MA *data***
Data range	0.1 to 800.0 [s^{-2}]
Shipping set	1.0

P MB : Move Deceleration

- Sets the deceleration in positioning control operation.
  - ◊ Refer to "6.3.1. Positioning Command."

Category	Parameter
Format	**MB *data***
Data range 1	0.0 : Use the same value as the parameter MA.
Data range 2	0.1 to 800.0 [s^{-2}]
Shipping set	0.0

P MD : Move Deceleration with Stop

- The parameter MD sets the deceleration for a stop command caused by the input STP (Stop) or the command MS (Motor stop).
  - ◊ Refer to "7.1.6. Stop: STP" for details.
- When a stop command is inputted, the System compares the deceleration of current positioning operation and the parameter MD and applies higher deceleration to stop the Motor faster.

Category	Parameter
Format	**MD *data***
Data range 1	0.0 : Apply the deceleration set to the operation currently being executed.
Data range 2	0.1 to 800.0 [s^{-2}]
Shipping set	0.0

MI : Read Motor ID

- Monitors the Motor type that can be matched with the Driver Unit and the version of firmware (software that controls the Driver Unit).

Category	Command
Format	**MI**

★P *MM : Multi-line Mode*

- This parameter defines the reporting format to which the Driver Unit must return the readout in multiple lines, such as for the commands TA (Tell alarm) and TS (Tell setting).
  - ◊ Refer to "8.9.1. Specifications of Communication" for details.

Category	Parameter	
Format	**MM *data***	
Data range	0 1	: Does not pause for a key input when the readout is multiple lines. : Pauses for a key input when the readout is multiple lines.
Shipping set	1	

- When the parameter is set to MM1, the Driver Unit pauses the readout displaying the colon ";" on the end of a line, such as **"PG0.10;"** in case of the command TS.
  - ◊ An input of the [SP] key reads out the next line.
  - ◊ Input of the [BS] key terminates reading out.
- When the parameter is set to MM0, the Driver Unit displays all results without pausing.

P MN : Monitor, Primary

- Sets an item to be monitored by the monitor MON1 (Primary analog monitor).
  - ◊ Refer to "7.4. Analog Monitors" for details.

Category	Parameter	
Format	**MN *data***	
Data range 1	0 1 2 3 4 5 6 7 8	: Current velocity : Commanded velocity : Velocity error : Torque command : øU current : Transient position command : Residual pulses in the error counter (Zoomed) : Residual pulses in the error counter (Normal) : Software thermal loading
Data range 2	*Command name*	: Specify a monitor name, such as **"MNTV"**, for monitoring.
Shipping set	0	

- A change of this parameter will automatically reset the parameters MNY (Monitor offset, primary) and MNR (Monitor range, primary) in accordance with the specified monitor.
  - ◊ The output offset of parameter MNY is set to a value when the monitor center is set to 2.5 [V].
  - ◊ The output range of parameter MNR is set to a value when the maximum monitor output is 5.0 [V].
- When a parameter or a monitor name is set to "data", the analog monitor outputs the value of specified parameter.

P MNR : Monitor range, Primary

- This parameter specifies the monitor output range of the parameter MN (Analog monitor, primary).
  - ◊ Refer to "7.4.2. Customization of Monitor Data" for details.

Category	Parameter
Format	**MNR *data***
Data range	Depends on the setting of parameter MN.
Shipping set	10.000

P MNY : Monitor Offset, Primary

- This parameter sets the offset of a monitor output specified by the parameter MN.
  - ◊ Refer to "7.4.2. Customization of Monitor Data" for details.

Category	Parameter
Format	**MNY** *data*
Data range	Depends on the setting of parameter MN
Shipping set	0.000

MO : Motor Off

- This command deactivates the Motor servo and afterward prohibits activating the Motor servo.
  - ◊ Refer to "7.1.4. Servo on: SVON" for details.
  - ◊ The command SV (Servo on) lifts the Motor off state. The input SVON (Servo on) controls on and off of the Motor servo.

Category	Command
Format	**MO**

P MR : Monitor Refresh Rate

- This parameter sets the minimum interval of repetitive readout for the option "**/RP**" or for multiple monitors.
- The parameter MR can be used when it is difficult to read the display because of a short monitoring interval.

Category	Parameter	
Format	**MR *data***	
Data range 1	–1	: Reset monitoring interval when it is altered.
Data range 2	0.0 to 10 000.0 [ms]	: Minimum monitoring interval of monitors.
Shipping set	0.0	

MS : Motor Stop

- This command stops the Motor operation caused by the internal command (Positioning command, jogging, and Home Return) and the programmed control operation.
- Higher deceleration compared between a setting of currently executing positioning operation and the parameter MD (STP move deceleration) will be applied to stop the Motor.

Category	Command
Format	**MS**

P MV : Move Velocity

- Specifies velocity for positioning operation.
  - ◊ Refer to "6.3.1. Positioning Command" for details.
  - ◊ Refer to "2.5. Motor Specifications" for details.

Category	Parameter
Format	**MV *data***
Data range	0.001 to 10.000 [s^{-1}]
Shipping set	1.000

- A change in the parameter MV in the middle of positioning operation is the real time execution to the velocity.

MW : Main Power Supply Internal Voltage Monitor

- Monitors the internal direct current voltage after commutation of the main power.

Category	Monitor
Format	**MW** ***data***
Data range	0.0 to 401.3 [v]

P *MX : Monitor, Secondary*

- Sets an item to be monitored by the MON2 (Analog monitor, secondary)
  - ◊ Refer to ”7.4. Analog Monitors” for details.

Category	Parameter	
Format	**MX** ***data***	
Data range 1	0	: Current velocity
	1	: Commanded velocity
	2	: Velocity error
	3	: Torque command
	4	: øU current
	5	: Transient position command
	6	: Residual pulses in the error counter (Zoomed)
	7	: Residual pulses in the error counter (Normal)
	8	: Software thermal loading
Data range 2	*Command name*	: Specify a monitor name, such as **“MXTV”**, for monitoring.
Shipping set	0	

- A change of this parameter will automatically reset the parameters MXY (Monitor offset, secondary) and MXR (Monitor range, secondary) in accordance with the specified monitor.
  - ◊ The output offset of parameter MXY is set to a value when the monitor center is set to 2.5 [V].
  - ◊ The output range of parameter MXR is set to a value when the maximum monitor output is 5.0 [V].

P *MXR: Monitor Range, Secondary*

- This parameter specifies the monitor output range of the parameter MX (Analog monitor, secondary).
  - ◊ Refer to “7.4.2. Customization of Monitor Data” for details.

Category	Parameter
Format	**MXR** ***data***
Data range	(Depends on the setting of the monitor MX.)
Shipping set	10.000

P MXY : Monitor Offset, Secondary

- The parameter MXY sets the offset of a monitor output specified by the parameter MX.
  - ◊ Refer to "7.4.2. Customization of Monitor Data" for details.

Category	Parameter
Format	**MXY *data***
Data range	Depends on the setting of parameter MX.
Shipping set	0.000

MY : Motor Cycle Stop

- The command MY causes the cycle stop of currently executing programmed operation.
  - ◊ The program processing stops at completion of program line currently executed
  - ◊ If the Motor is moving, it stops at its completion of the operation.

Category	Command
Format	**MY**

P NA : Near A

- The parameter sets a proximity distance to activate the output NEARA (Target proximity A).
  - ◊ Refer to "7.2.7. Target Proximity: NEARA and NEARB" for details.
- In a positioning operation, the output NEARA closes when the Motor reaches to the point short from the target position set by the parameter NA in units of pulse.

Category	Parameter
Format	**NA *data***
Data range	0 to 2 62 144 000 [pulse]
Shipping set	0

P NB : Near B

- The parameter sets a proximity distance to activate the output NEARB (Target proximity A).
  - ◊ Refer to "7.2.7. Target Proximity: NEARA and NEARB" for details.
- In a positioning operation, the output NEARB closes when the Motor reaches to the point short from the target position set by the parameter NB in units of pulse.

Category	Parameter
Format	**NB *data***
Data range	0 to 2 62 144 000 [pulse]
Shipping set	0

P NP : Notch Filter, Primary

- Sets a notch filter to the torque command.
  - ◊ Refer to ”5.5.2. Setting Notch Filter” for details.

Category	Parameter	
Format	**NP *data***	
Data range 1	0	: Primary notch filter off
Data range 2	40 to 1 000 [Hz]	
Shipping set	0	

P NPQ : Notch Filter, Primary Q Parameter

- Sets the Q parameter of the parameter NP.
  - ◊ Refer to “Digital Filter” for details.

Category	Parameter
Format	**NPQ *data***
Data range	0.10 to 5.00
Shipping set	0.25

P NS : Notch Filter, Secondary

- Set a notch filter to the torque command.
  - ◊ Refer to “ 8.5.2. Digital Filter” for details.

Category	Parameter	
Format	**NS *data***	
Data range 1	0	: Secondary notch filter off.
Data range 2	40 to 1 000 [Hz]	
Shipping set	0	

P NSQ : Notch filter, Secondary Q Parameter

- Sets the Q parameter of the parameter NS.
  - ◊ Refer to “8.5.2. Digital Filter” for details.

Category	Parameter
Format	**NSQ *data***
Data range	0.10 to 5.00
Shipping set	0.25

★ *OD: pOwer on Display*

- The parameter sets if the version of Driver Unit is displayed at the time of power on.

Category	Parameter	
Format	**OD *data***	
Data range	0 1	: Version display at power on is disabled. : Version display at power on is enabled.
Shipping set	1	

P *OE : Sequence Option Edit*

- This parameter controls the program processing sequence between program channels.
  For an example, the parameter OE enables following program processing:
  • Continual execution of channel programs with consecutive channel number
  • Every input of the input RUN executes the program of the following channel number.

  ◊ Refer to "6.3.2.4. Program Sequence" for details.

Category	Parameter	
Format	**OE *data***	
Data range	0 1 2	: Completes program processing after execution of current channel. : After completion of the current program channel, executes the program of the following channel number. (Ignores the input RG.) : Continually executes the program channel with the following number.
Shipping set	0	

★ *OP : Compulsion Output*

- The command OP forcibly changes the state of the output ports PO0 to PO7 of the connector CN2 (Control Input/Output connector).

  ◊ Refer to "8.1.3.4. Forcible Output in Setting of Output Port Function" for details.

- It can be used for checking interface with the master controller.

Category	Command	
Format	**OP $d_7d_6d_5$ $d_4d_3d_2d_1d_0$**	
Data range (d_n)	0 1 X	: Open : Closed : No change in the state of outputs

- The data d_7 to d_0 correspond respectively to the output ports PO7 to PO0.

★P *OS : Origin Setting Mode*

- The parameter OS specifies the operation mode of Home Return.
  - ◊ Refer to "8.8. Home Return" for details.

Category	Parameter	
Format	**OS**	
Data range	1	: Sets the home position to the point passing the ON area of home sensor.
	3	: Sets the home position to the detecting point of the first øZ signal after passing the home sensor ON area.
	4	: Sets the home position to the detecting point of the first øZ signal after entering the home sensor ON area.
	5	: Sets the home position to the point entering to the home sensor ON area.
	6	: Sets the home position to the current position. The Motor does not move.
	7	: Sets the home position to the detecting point of øZ signal when returning in the direction to the signal after entered the ON area of the limit sensor.
Shipping set	6	

★P *OTP : Soft Travel Limit, Puls*

- The parameter sets the stating point of the software over travel limit.
  - ◊ Refer to "6.2.4. Software Over Travel Limit" for details.
  - ◊ The limited area starts from the setting of the parameter OTP and ends at the setting of the parameter OTM, following in the counting up direction of the scale data.

Category	Parameter
Format 1	**OTP *data***
Format 2	**OTP /ST** : Sets the current position to the limit.
Data range	0 to 2 621 439 [pulse]
Condition to be met	<In case of the teaching by the OTP/ST> • Alarm A0 (Position sensor error) is not occurring. • Alarm A1 (Absolute position error) is not occurring. • Alarm A4 (Over speed) is not occurring.

★P *OTM : Soft travel limit, minus*

- The parameter OTM sets the end point of the software over travel limit.
  - ◊ Refer to "6.2.4. Software Over Travel Limit" for details.
  - ◊ The limited area starts from the setting of the parameter OTP and ends at the setting of the parameter OTM, following in the counting up direction of the scale data.

Category	Parameter
Data 1	**OTM *data***
Data 2	**OTM /ST** : Sets the current position to the limit.
Data range	0 2 621 439[pulse]
Conditions to be met	<In case of the teaching by the OTP/ST> • Alarm A0 (Position sensor error) is not occurring. • Alarm A1 (Absolute position error) is not occurring. • Alarm A4 (Over speed) is not occurring.

P OV : Velocity Override

- This parameter sets the velocity change ratio at when the input ORD (Velocity override) is ON.
  - ◊ Refer to "8.2.2. Velocity Override: ORD" for details.

Category	Parameter
Format	**OV *data***
Data range	0.00 to 200.00[%]
Shipping set	100.00

★P PC : Pulse Command

- This parameter sets the format of pulse train for the inputs of CWP (CW pulse train) and CCWP (CCW pulse train) of the connector CN2 (Control Input/Output connector).
  - ◊ Refer to "6.3.3. Pulse Train Command Positioning Operation" for details.

Category	Parameter	
Format	**PC *data***	
	0	: CW/CCW(Input CWP: CW, and Input CCWP: CCW)
	1	: Pulse and direction (Input CWP: Direction and Input CCWP: pulse)
	4	: øA/øB (Input CWP: øA and Input CCWP: øB)
Shipping set	0	

PF : (Factory use only)

- This monitor is for factory use only.

P PG : Position Gain

- This parameter sets the position loop proportional gain.
  - ◊ Refer to "8.5.1. Servo Block Diagram" for details.

Category	Parameter
Format	**PG *data***
Data range	0.001 to 10.000
Shipping set	0.001

- The parameter SG (Servo gain) will be cleared to zero if the parameter PG is changed.

P PGL : Position Gain, Lower

- This parameter sets the position loop proportional gain for the stationary Motor in the automatic gain switching function.
  - ◊ Refer to "8.5.4. Automatic Gain Switching" for details.
  - ◊ The gain switching function is effective when the parameter GP (Gain switching point) is a plus value (GP > 0).

Category	Parameter
Format	**PGL *data***
Data range	0.001 to 10.000
Shipping set	0.0010.001

(★) PI : Edit Input Port

- This command is to edit the function of the input ports of P10 to P15 of the connector CN2.
  - ◊ Refer to "8.1.3.1. Editing Control Input Function" for details.

category	Command	
Format 1	**PI *data***	: Edits a specified input port.
Format 2	**PI /RS**	: Resets a specified input port to the shipping set. (Requires an entry of the password.)
Format 3	**PI /CL**	: Resets all input ports to the shipping set. (Requires an entry of the password.)
Data range	0~ to 16 [Port]]	

- This command enables to set the parameters FN (Port function), AB (input port polarity) and NW (Anti-chattering timer).
  The input signal will be imported to the Driver Unit in the following way.
  1) The Driver Unit recognizes the state of electrical ON/OFF signals as the ON/OFF signals that carry information on the port polarity set by the parameter AB.
  2) The Driver Unit confirms that the signal is being ON continually longer than the specified time by the parameter NW.
  3) The Driver Unit makes the assigned function to the ports effective in accordance with the parameter. The Driver Unit recognizes the ON/OFF signals
- The function assigned to the input port PI0 is fixed to the input EMST (Emergency stop). However, the parameters AB and NW may be set to the port.

Category	Parameter
Format	**FN *data***
Data range 1	NONE : No function assigned.
Data range 2	One of the following: EMST,ACLR,OTP,OTM,SVON,RUN,STP,PRG0~7,JOG,DIR,HLD,ORD,IOFF,HOS,HLS
Condition	Servo off

Category	Parameter
Format	**AB *data***
Data range	0 : Normally open contact 1 : normally closed contact
Condition	Servo off.

Category	Parameter
Format	**NW *data***
Data range	0.0 to 1 000.0 [ms]
Condition	Servo off.

P PK : Parameter Keep

- This parameter decides whether to keep or not to keep the parameter, which has been changed in the program (local parameter), after completion of the program operation. (If a local parameter is decided to be kept, it will be kept until the control power is turned off.)
  - ◊ Refer to "8.7.1. Change of Parameter via Program Operation" for details.
- The parameter is used to change a parameter by a program operation.

Category	Parameter	
Format	**PK *data***	
Data range 1	0	: Nullifies a local parameter at completion of the program operation
Data range 2	1	: Keeps a local parameter and makes it effective at completion of the program operation.
Shipping set	0	

- The prompt tells you which parameter is currently effective.
  - ◊ "**:** >" : The local parameter is effective.
  - ◊ "**:**" : The global parameter is effective.
- The command RE (Reset global parameter) resets a global parameter and nullifies a local parameter.

★P PM : Pulse train input filter

- This parameter sets the maximum frequency of pulse train.
  - ◊ Refer to "6.3.3. Pulse Train Command Positioning Operation" for details.

Category	Parameter
Format	**PM *data***
Data range	1, 2, 4 [MHz]
Shipping set	1

- Since higher maximum frequency can be affected by the noise, select the suitable setting.

(★) PO : Edit Output Port

- This command is to edit the function of output ports PO0 to PO7 of the connector CN2.
- The following grammar enables to edit individual output port.
  - ◊ Refer to "8.1.3.2. Editing Control Output Function" for details.

Category	Command	
Format 1	**PO *data***	: Edits a specified output port.
Format 2	**PO /RS**	: Reset a specified output port to the shipping set. (Requires an entry of the password.)
Format 3	**PO /CL**	: Reset all output port to the shipping set. (Requires an entry of the password.)
Data range	0 to 7 (Port number)	

- The command PO sets the parameters FN (Port function), QC (Output logic) and ST (Stability timer). The output signals are outputted in the following steps from the Driver Unit.
  1) Distinguishes the state if an output signal is detected or not detected in accordance with the setting of parameter FN.
  2) Checks if an output signal stays in detected condition continuously for a time length set by the parameterSN.
  3) Opens or closes the output ports in accordance with the settings of the parameter GC.
- The output port PO0 is exclusively used for the safety function. Thus, setting to the parameter FN (Port function) to the port PO0 hall be either one of the DRDY (Driver Unit ready) or the NRM (Normal) for the port. You cannot change the setting of the parameters QC and ST.

Category	Parameter
Format	**FN *data***
Data range 1	NONE : No function is set.
Data range 2	One of the following functions DRDY, WRN. OTPA. OTMA, SVST, BUSY, IPOS. NEARA, NEARB, ZONEA. ZONEB, ZONEC, TEU, TEO, TVU, TVO, TTU, TTO, TJU, TJO, OTXA, NRM, HOME, HCMP

Category	Parameter
Format	**GC *data***
Data range	0 : Positive logic 1 : Negative logic

Category	Parameter
Format	**ST *data***
Data range	0.0 to 1 000.0 [ms]

★P PP : Parameter Prompt

- There are two prompts for programming to distinguish which parameter is effective: the local parameter that is changed especially for a program channel or the global parameter that is set by the normal prompt.
  - ◊ "**:**" : Global parameter is effective.
  - ◊ "**: >**" : Local parameter is effective.

    When the parameter is set via RS-232C communication, both parameters, global and local, are set to the channel, even the prompt is ":>".

- Setting the parameter PP0 will make possible not change the prompt.
  - ◊ Refer to "6.3.2.2. Program Positioning Operation via RS-RS-232C Communication" for details.

Category	Parameter	
Format	**PP *data***	
Data range	0 1	: Does not change the prompt. (Always ":") : Indicates the effective parameter. (":" of ": >″)
Shipping set	1	

★P PS : Position Scale Select

- This parameter specifies the position scale system.

Category	Parameter	
Format	**PS *data***	
Data range	1	: One revolution position scale
Shipping set	1	

PWU : (Factory use only)

- This monitor is for factory use only.

PWV : (Factory use only)

- This monitor is for factory use only.

PWW: (Factory use only)

- This parameter is for factory use only.

★P QR : Dividing Number, User Scale

- This parameter specifies the dividing number of one revolution of the Motor for the unit of user scale system, to which the positioning commands IQ and AQ (Positioning command, user scale) follows.
  - ◊ Refer to "8.6.4. User Scale Positioning" for details.
- For an example, the System divides the total circumference of Motor rotation into four points starting from the position 0 (zero) if the parameter is set to "QR4" and each divided point will be a target position.

Category	Parameter
Format	**QR *data***
Data range	1 to 2 621 440 [dividing number/revolution]
Shipping set	360 000

RA : Read Analog Command

- This is to monitor the analog command input value when analog input is valid.
  - ◊ When analog command input is invalid, "RA INHIBITED" is displayed.

Category	Command
Format	**RA/RP**

- When RA command is executed with /RP attached, readout will be repeated, and when executed without /RP, the readout will be executed only once. To terminate the repetition, press BS key.
- The display will be in the decimal notation of -32767 to 32767.

P RE : Reset, Global Parameters

- This command nullifies the local parameter that has been held in the program and makes the global parameter effective until the next program operation starts.
  - ◊ The local parameter, which is changed from the global parameter in the program channel, is effective in the program positioning operation or when the parameter PK (Parameter keep) is set to PK1.
  - ◊ The command RE is to reset the global parameter when it is substituted by the local parameter by a program operation.
- The command RE is to reset the global parameter when it is substituted by the local parameter by a program operation.
  - ◊ Refer to "8.7.1. Change of Parameter via Program Operation" for details.

Category	Command
Format	**RE**

P RP : Read Pulse Train Command

- This monitor reports the number of inputted pulses to the inputs CWP (CW pulse train) and CCWP (CCW pulse train) of the connector CN2.
  - ◊ The format of inputted pulses shall comply with the setting of the parameter PC (Pulse command).
- This parameter may be used for checking the number of pulses inputted by a pulse train.
  - ◊ Refer to "7.3.3. Pulse Train Counter: Monitor RP" for details.

Category	Monitor
Format	**RP *data***
Data range	<Readout> –2 147 483 648 to 2 147 483 647 [pulse] : Setting the data to zero (0) resets the monitor to zero (0). <Input> –2 147 483 647 to 2 147 483 647 [pulse]

- The counting direction is up for the plus direction pulse train and down for the minus direction pulse train.

★★P SC : (Factory use only)

- This parameter is factory use only. Do not change the setting.

P SF : SoFt start

- This parameter is used to set up the startup time of command under velocity control mode and torque control mode.

Category	Parameter	
Format	**SF *data***	
Data range 1	0	: Soft start invalid
Data range 2	0 to 100,000 [ms]	
Shipping set	0	

- data denotes the time to reach the maximum command value.
  - ◊ The data denotes the time to reach 32767 in DC command of AC0.
  - ◊ The data denotes the time to reach the velocity command value or torque command value that is set to +10[V] in the analog input command of AC1 and AC-1.

P SG : Servo Gain

- This parameter sets the position loop bandwidth.
  - ◊ Refer to "5.3. Tuning Level 2: Servo Gain Tuning" for details.
- A quadruple value of the setting of the parameter SG is the actual position loop bandwidth.

Category	Parameter	
Format	**SG *data***	
Data range 1	0	: Manual setting by the parameters PG and VG
Data range 2	1 to 250 [× 4 Hz]	: Position loop control band width
Shipping set	0	

- A change in the parameter SG automatically resets the parameters PG (Position loop proportional gain) and VG (Velocity loop proportional gain).
- Changes in the parameters PG, VG and LO (Load inertia) will clear the parameter SG to zero (0).

★ SI : Set Initial Parameters

- This command resets the parameters to the shipping set.

Category	Command	
Format 1	**SI**	: Initializes the servo parameters. (The parameters to be read out by the commands TS1 and TS2.)
Format 2	**SI /SY**	: Initializes all parameters excluding the parameter AO (Absolute position scale offset.
Format 3	**SI /AL**	: Initializes all parameters.
Condition to be met	The servo must be deactivated. (In case of the commands SI/SY or SI/AL)	

- In case of the alarm E2 (RAM error) or the alarm E7 (System error), execution of the command SI will automatically initialize the broken area of the ROM.
- The command SI does not initialize programs, the function set to the control input/output and the alarm history. The following commands reset to the shipping set respectively.
  - ◊ Initialization of the programs: Command CC/AL
  - ◊ Initialization of the function set to the control inputs and outputs: Commands PI/CL or PO/CL
  - ◊ Initialization of the alarm history: Command TA/CL

⚠ *Caution: The initialization of the System requires approximately 40 seconds. If the control power is turned off during the initialization, the alarm E2 (RAM error) may occur.*

★P SK : (Factory use only)

- This parameter is for factory use only. Do not change the setting. .

★ *SL : Set Control Mode*

- This parameter is used to set up the control mode.
  - ◊ SL1: Torque control mode
  - ◊ SL2: Velocity control mode
  - ◊ SL3: Position control mode

Category	Command
Format	**SL *data***
Data range	1 to 3
Shipping set	3

SP : Start Program

- This command starts the program of the specified program channel.
  - ◊ Refer to "6.3.2.2. Program Positioning Operation via RS-232C Communication" for details.

Category	Command
Format 1	**SP *data***
Format 2	**SP /AJ** : Starts the demonstration program.
Data range	0 to 255 [channel]
Conditions to be met	• The Motor is not stopping because of an alarm or wiring. • The input STP (Stop) is not activated. • All conditions for execution of the program is met. In case of the command "SP/AJ", the following conditions are necessary in addition to the above conditions. • The servo is on. • The System is not in positioning operation caused by the internal command (Positioning command, Jogging, and Home Return).

★ *SQ : (Factory use only)*

- This parameter is for the factory use only. Do not change the setting. .

SU : transmission check SUm

- This parameter is used to attach the check sum to the transmission data from Driver Unit.

Category	Parameter
Format	**SU** *data*
Data range	0 : No check sum is transmitted. 1 : Check sum is transmitted.
Shipping set	0

- This allows the use of check sum output function for error detection in RS-232C communication.
- Since parameter SU is not saved to non-volatile memory for backup, it is necessary to set up SU1 at every startup time.
- While with command transmission from the higher level controller the error can be detected by the transmitted data and the echo-back from Driver Unit, this function will be used in the case where the string transmitted from Driver Unit is unpredictable as in the case of monitor command (example: TP command).
- The check sum applies to characters starting immediately after line feed code (0Ah) to the character immediately before the carriage return code (0Dh).
- Before outputting the carriage return code (0Dh), check sum output code@(40h) followed by check sum will be transmitted.
- The check sum is created by summing up the ASCII code of entire object characters and then converting the lower 8 [bit] of the sum to 1's complement.

Figure 9-6: Response in the case of SU0

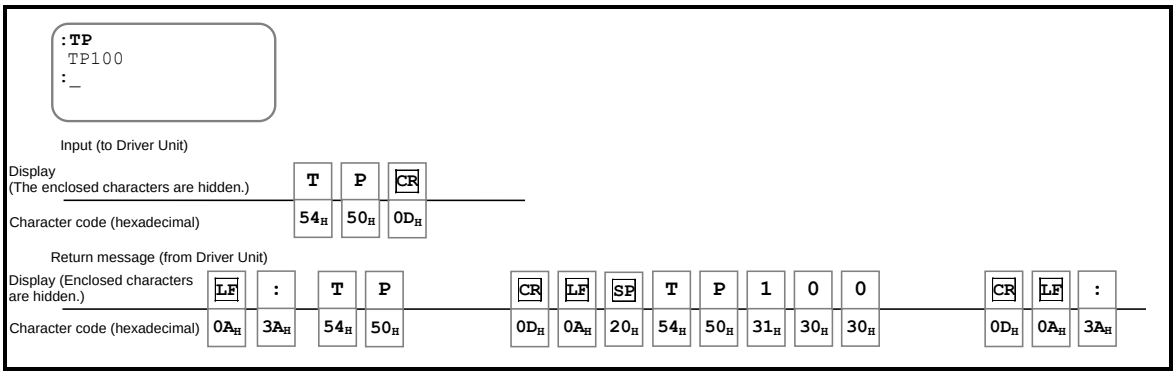

Figure 9-7: Response in the case of SU1

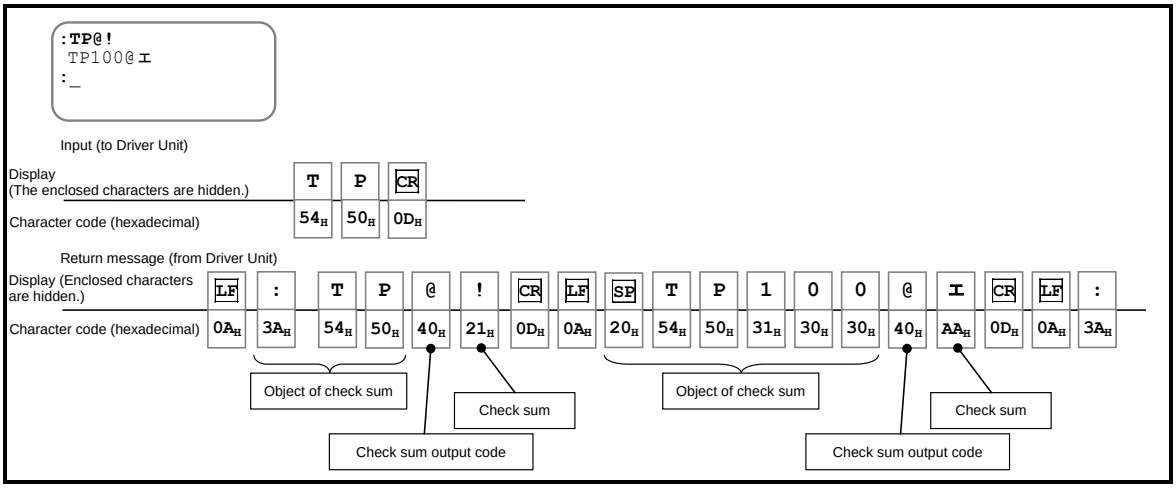

SV : Servo on

- The command SV allows the System to activate the Motor servo. The input SVON (Servo on) controls on and off of the Motor servo.
  - ◊ Refer to "7.1.4. Servo on: SVON" for details.
  - ◊ The command MO (Motor off) deactivates the Motor servo and prohibits activating the Motor servo afterward.

Category	Command
Format	**SV**

SW : Saw Wave

- This monitor outputs a saw wave to the monitors MON1 and MON2.

Category	Monitor
Format	**SW**
Data range	–128 to 127

- For an example, set the parameter MN (Primary analog monitor) to "MNSW" for testing the primary analog monitor.
  - ◊ The monitor outputs the saw wave of which frequency is 256 [ms] and output level is 0 to 5 [V].

Figure 9-8: Example of the analog monitor SW

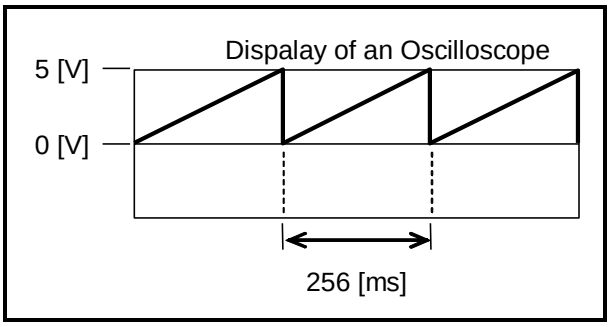

(★) TA : Tell Alarm Status

- This monitor reads out the contents of alarm and warning.
  - ◊ Refer to "7.3.2. Alarm Monitor" for details.

Category	Monitor	
Format 1	**TA**	: Identifies all alarms and warnings currently reported.
Format 2	**?TA**	: Reads out all alarms currently reported at one time.
Format 3	**TA /HI**	: Reads out the history of alarms, warnings and events.
Format 4	**TA /CL**	: Clears the history of alarm occurrence. (Requires an input of the password.)

- Refer tot"11. Warning and Alarm" for the alarms and the warnings.

TC : Tell Channel Program

- This command reads out the contents of the program of a specified program channel.
  - ◊ Refer to "6.3.2.3. Programming" for details.

Category	Command	
Format 1	**TC *data***	: Reads out the contents of the specified program channel.
Format 2	**TC /AL**	: Reads out the contents of all program channels.
Data range	0 to 255 [channel]	

TCV : (Factory use only)

- This monitor is for factory use only.

TD : Tell Position, Degree Unit

- Monitors the current position.
  - ◊ Refer to "7.3. RS-232C/USB Monitor" for details.

Category	Monitor
Format	**TD**
Data range	0 to 35 999 [0.01°]

TDC: Tell Command Position, Degree Unit

- Reports the current commanded position.
  - ◊ Refer to "7.3. RS-232C/USB Monitor" for details.
  - ◊ The commanded position equals a sum of the current position data and the position error: that is the current target position.

Category	monitor
Format	**TDC**
Data range	0 to 35 999 [0.01°]

TDV : (Factory use only)

- This monitor is for the factory use only.

TE: Tell Position Error Counter

- Monitors the state of the position error counter.
  - ◊ Refer to " 7.3. RS-232C/USB Monitor" for details.
  - ◊ The position error counter indicates the difference between the current position and the commanded position.

Category	monitor
Format	**TE**
Data range	0 to ± 2 621 439 [pulse] (This is an approximate number.)

P TEO : Tell Position Error, Over

- This parameter specifies the threshold for an activation of the output TEO (Position error, over).
  - ◊ Refer to "8.3.2.1. Position Error: TEU (Position Error, Under) and TEO (Position Error, Over)" for details.
  - ◊ The output TEO activates when the data of the position error counter is greater or equal to the setting of the parameter TEO.

Category	Parameter
Format	**TEO *data***
Data range	0 to 2 621 439 [pulse]
Shipping set	0

P TEU : Tell Position Error, Under

- This parameter specifies the threshold for an activation of the TEU output (Position error, under)
  - ◊ Refer to "8.3.2.1. Position Error: TEU (Position Error, Under) and TEO (Position Error, Over)" for details.
  - ◊ The output TEU activates when the data of the position error counter is less or equal to the setting of the parameter TEU.

category	Parameter
Format	**TEU *data***
Data range	0 to 2 621 439 [pulse]
Shipping set	0

TG: Tell Gain Switching

- This monitor reports the state of the automatic gain switching function.
  - ◊ Refer to "8.5.4. Automatic Gain Switching" for details.

Category	Monitor
Format	**TG**
Data range	0 : The gains for gain switching are applied. (Parameters PGL and VGL) 1 : The normal gains are applied. (Gains PG and VG)

Pex. TI: Timer

- This parameter sets the pausing time of an operation to a program.
  - ◊ Refer to "6.3.2.4. Program Sequence" for details.

Category	Parameter
Format	**TI *data***
Data range	0.0 to 10 000.0 [ms]

- At the state of the normal command prompt, an input of the command "?TI" reports the residual time of the timer currently applied.

TJ : Tell thermal

- This monitor reports the thermal loading.
  - ◊ Refer to "7.3.6. Monitor for Software Thermal Loading:Monitor TJ" for details.
  - ◊ The warning A3 (Over Load) occurs when the readout of the monitor TJ is 100.
- It is essential to reduce the thermal loading to 0% for continual operation of one "user defined" cycle.

Category	Monitor
Format	**TJ**
Data range	0.00 to 100.00[%]

P *TJO : Tell thermal, over*

- This parameter specifies the threshold of the thermal loading to activate the output TJO (Thermal loading over).
  - ◊ Refer to "8.3.2.5. Thermal Loading: Outputs TJU (Thermal Loading, Under) and TJO (Thermal Loading, Over)" for details.
  - ◊ The output TJO reports that the thermal loading is over when it is greater or equal to the setting of the parameter TJO.

Category	Parameter
Format	**TJO *data***
Data range	0.00 to 100.00[%]
Shipping set	0.00

P *TJU : Tell thermal, under*

- This parameter specifies the threshold of the thermal loading to activates the output TJU(Tell thermal, under).
  - ◊ Refer to "8.3.2.5. Thermal Loading: Outputs TJU (Thermal Loading, Under) and TJO (Thermal Loading, Over)" for details.
  - ◊ The output TJU activates when the thermal loading is less or equal to the setting of the parameter RJU.

Category	Parameter
Format	**TJU *data***
Data range	0.00 to 100.00[%]
Shipping set	0.00

★P *TL : Torque limit rate*

- This parameter limits the output torque.
  - ◊ Refer to "8.5.1. Servo Block Diagram" for details.

Category	Parameter
Format	**TL *data***
Data range	0.00 to 100.00[%]
Shipping set	100.00

TN: Tell position, CR unit

- This monitor reports the current position.
  - ◊ Refer to "7.3. RS-232C/USB monitor" for details.
  - ◊ The monitor TN reports the current position in the units set by the parameter CR (Circular resolution).
  - ◊ This monitor is used to read out the position data in the pulse train command positioning.

Category	Monitor
Format	**TN**
Data range	0 to Parameter CR –1 [360°/Parameter CR]

TNC : Tell command position, CR unit

- This monitor reports the current commanded position.
  - ◊ Refer to "7.3. RS-232C/USB Monitor" for details.
  - ◊ The commanded position is a sum of the current position and the position error; it is the current target position, that is.
  - ◊ The monitor TNC reads out the current poison in the units set by the parameter CR (Circular resolution).
  - ◊ This monitor is used to read out the position data in the pulse train command positioning.

Category	Monitor
Format	**TNC**
Data range	0 to Parameter CR – 1 [360°/Parameter CR]

TOB : (Factory use only)

- This monitor is for factory use only.

TP : Tell position, pulse unit

- This monitor reads out the current position.
  - ◊ Refer to "7.3.5. Current Position Monitor: Monitor TP" for details.

Category	Monitor
Format	**TP**
Data range	0 to 2 621 439 [pulse]

TPC : Tell Command Position, Pulse Unit

- This monitor reads out the current commanded position.
  - ◊ Refer to "7.3. RS-232C/USB monitor" for details.
  - ◊ The commanded position is a sum of the current position and the position error: that is the current target position.

Category	Monitor
Format	**TPC**
Data range	0 to 2 621 439 [pulse]

TPI : Tell Input Port

- This command monitors the function setting to the input ports.
  - ◊ Refer to "8.1.3.1. Editing Control Input Function" for details.

Category	Command	
Format 1	**TPI *data***	: Monitors the setting of a specified control input port.
Format 2	**TPI /AL**	: Monitors the all settings of the control input ports.
Data range	0 to 16 [port]	

Figure 9-9: Example of the command TPI/AL

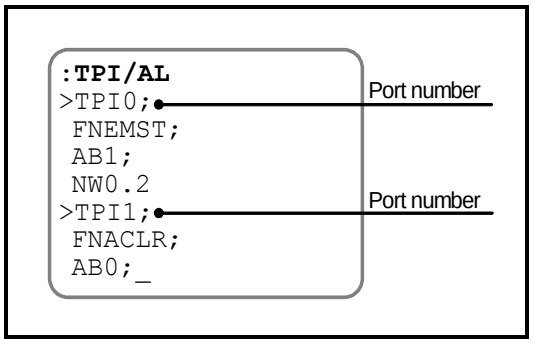

TPO : Tell Output Port

- This command reads out the function setting of the control output ports.
  - ◊ Refer to "8.1.3.2. Editing Control Output Function" for details.

Command	Command	
Format 1	**TPO *data***	: Monitors the function setting of a specified control input port.
Format 2	**TPO /AL**	: Monitors the all function settings of the control input ports.
Data range	0 to 7 [Port]	

Figure 9-10: Example of the command TPO/AL

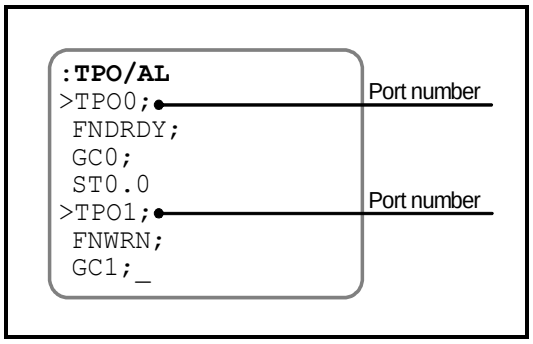

TQ : Tell Position, QR Unit

- This monitor reads out the current position.
  - ◊ Refer to "8.6.4. User Scale Positing" and "7.3. RS-232C/USB Monitor" for details.
  - ◊ The readout is in units of the data by the parameter QR (Dividing number, user scale).
  - ◊ This is to monitor the position when a positioning is caused by the commands AQ or IQ(User scale positioning).

Category	Monitor
Format	**TQ**
Data range	0 to Parameter QR –1 [360°]/Parameter QR]

TQC : Tell Command Position, QR Unit

- This monitor reads out the current commanded position.
  - ◊ Refer to "8.6.4. User Scale Positioning" and "7.3. RS-232C/USB Monitor" for details.
  - ◊ Commanded positioning is a sum of the current position and the position error; it is the current target position, that is.
  - ◊ The readout is in units the resolution specified by the parameter QR (Dividing number, user scale).
  - ◊ This is used to monitor the position data in a positioning caused by the commands AQ or IQ (User scale positioning).

Category	Monitor
Format	**TQC**
Data range	0 to Parameter QR – 1 [360°/Parmeter]

TR : Tell RDC Position Data

- This monitor reads out the error in error counter.
- The monitor TR is used when adjusting the position of a limit sensor for Home Return operation.
  - ◊ Refer to "8.8.4. Position Adjustment of Home Limit Sensor" for details.

Category	Monitor
Format	**TR**
Data range	0 to 65535 [0.5 pulses]

TRC : Tell Rotation Command

- This monitor reads out the transient velocity command.
  - ◊ Refer to "7.3. RS-232C/USB Monitor" for details.
  - ◊ The transient position command is a differentiation (sampling) of the velocity command; it can be the velocity compensation command.

Category	Monitor
Format	**TRC**
Data range	0.000 to ± 10.000 [s^{-1}]

TRS : (Factory use only)

- This monitor is factory use only.

TS: Tell Settings

- This command monitors the parameter settings in a group.
  - ◊ Refer to "4.3. Readout of Parameter" for details.

Category	Command	
Format 1	**TS *data***	
Format 2	**TS *data* /MD**	: Reads out only the parameters altered from the shipping set.
Data range 1	0	:Reads out all groups.
Data range 2	1 to 12 [Group]	: Reads out the specified group.

Table 9-9: Reading out groups by the command TS

TS	Group	Parameters
0	All parameters	(All parameters listed below)
1	Basic servo	**PG, PGL, VG, VGL, FQ, LG, LB, TL, GP, GT**
2	Applied servo	**FO, FP, FS, NP, NPQ, NS, NSQ, DBP, BL, FF, ZF**
3	Positioning completion	**CO, IN, IS, FW**
4	Pulse train input	**CR, PC, PM**
5	Position feedback	**FD, FZ, FR**
6	Position scale data	**PS, DI, OTP, OTM, AO**
7	Positioning	**MV, MA, MB, JV, JA, JB, HV, HA, HB, HZ, MD, CSA, CSB, QR, OE, PK, AE**
8	Home return	**OS, HD, HO**
9	(Reserved)	**SQ**
10	General inputs/outputs	**OV, BW, NA, NB, ZAS, ZAE, ZAW, ZBS, ZBE, ZBW, ZCS, ZCE, ZCW, TEU, TEO, TVU, TVO, TVEU, TVEO, TTU, TTO, TJU, TJO, MN, MNR, MNY, MX, MXR, MXY, POD**
11	Communication	**MM, BM, WM, EC, MR, PP**
12	Automatic tuning	**LO, SG, ZP**
13	Analog input related	**SL, AC, AG, AF, DBA, AFP, AFS, SF**

TST: Tell Settle Time

- This monitor reads out the settling time by a positioning command.
  - ◊ Refer to "7.3. RS-232C/USB Monitor" for the details.
  - ◊ The settling time is the time stating from an input of the internal position command to the first completion of a positioning operation.
  - ◊ The readout is reset at every completion of positioning operation.

Category	Monitor
Format	**TST**
Data range	0.0 to 214 641 044.2 [ms]

TT : Tell Torque Command

- This monitor reads out the torque command.
  - ◊ Refer to "7.3. RS-232C/USB Monitor" for details.

Category	Monitor
Format	**TT**
Data range	0.00 to ±100.00[%]

P TTO : Tell Torque Command, Over

- This parameter sets the threshold to activate the putout TTO (Torque command over).
  - ◊ Refer to "8.3.2.4. Torque Command: Output TTU (Torque command, under) and Output TTO (Torque command, over) " for details.
  - ◊ The output TTO activates when the torque command is greater or equal to the threshold specified by the parameter TTO.

Category	Parameter
Format	**TTO *data***
Data range	0.00 to 100.00[%]
Shipping set	0.00

P TTU : Tell Torque Command, Under

- The parameter sets the threshold to activates the TTU (Torque command, under)
  - ◊ Refer to "8.3.2.4. Torque Command: Output TTU (Torque command, under) and Output TTO (Torque command, over) " for details.
  - ◊ The output TTU activates when the torque command is less or equal to the threshold set by the parameter TTU.

Category	Parameter
Format	**TTU *data***
Data range	0.00 to 100.00[%]
Shipping set	0.00

TV : Tell Velocity

- Reads out the current velocity.
  - ◊ Refer to "7.3. RS-232C/USB Monitor" for details.

Command	Monitor
Format	**TV**
Data range	0.000 to ± 10.000 [s^{-1}] (The data range is an approximate value.)

TVC : Tell Velocity Command

- This monitor reads out the transient velocity command in the internal control block.
  - ◊ Refer to "7.3. RS-232C/USB Monitor" and "8.5.1. Servo Block Diagram" for details.

Category	Monitor
Format	**TVC**
Data range	0.000 to ±10.000 [s^{-1}] (The data range is a ball park figure.)

TVE : Tell Velocity Error

- This monitor reads out the velocity error in the internal control block.
  - ◊ Refer to "7.3. RS-232C/USB Monitor" and "8.5.1. Servo Block Diagram" for details.

Category	Monitor
Format	**TVE**
Data range	0.000 to ± 10.000 [s^{-1}] (the data range is a ballpark figure.)

P *TVEO: Tell Velocity Error, Over*

- This parameter sets the threshold to activate the output TVEO (Velocity error, over).
  - ◊ See "8.3.2.2. Velocity: Outputs TVEU (Velocity Error, Under) and TVEO (Velocity Error, Over)" for details.
  - ◊ The output TVEO activates when the absolute value of the velocity error is greater or equal to the threshold set by the parameter TVEO.

Category	Parameter
Format	**TVEO *data***
Data range	0.000 to 10.000 [s^{-1}]
Shipping set	0.00

P *TVEU: Tell Velocity Error, Under*

- This parameter sets the threshold to activate the output TVEU (Velocity error, under).
  - ◊ ●See "8.3.2.2. Velocity: Outputs TVEU (Velocity Error, Under) and TVEO (Velocity Error, Over)" for details.
  - ◊ The output TVEU is less or equal to the threshold set by the parameter TVEU.

Category	Parameter
Format	**TVEU *data***
Data range	0.000 to 10.000 [s^{-1}]
Shipping set	0.00

P *TVO: Tell Velocity, Over*

- This parameter sets the threshold to activate the output TVO (Velocity over).
  - ◊ Refer to "8.3.2.3. Velocity: Outputs TVU (Velocity, under), and TVO (Velocity, over)" for details.
  - ◊ The outpour TVO activates when the absolute value of the velocity is greater or equal to the threshold set by the parameter TVO.

Category	Parameter
Format	**TVO *data***
Data range	0.000~¥ to 10.000 [s^{-1}]
Shipping set	0.00

P *TVU: Tell Velocity, Under*

- This monitor sets the threshold to activate the output TVU (Velocity over).
  - ◊ Refer to "8.3.2.3. Velocity: Outputs TVU (Velocity, under), and TVO (Velocity, over)" for details.
  - ◊ The output TVU activates when the absolute value of the velocity is less or equal to the threshold set by the parameter TVU.

Category	Parameter
Format	**TVU *data***
Data range	0.000 to 10.000 [s^{-1}]
Shipping set	0.00

TX0 : Parameter Dump

- This command reads out all user parameters excluding the parameter AO (Absolute position scale offset) and the parameter MM (Multi-line mode).
  - ◊ The parameter AO holds the home position data set by the user. Monitor the individual setting of each Motor.
- When backing up the settings of the Driver Unit, receive the response of command TX0 by such means as EDD Megaterm and store it as the text file.
  - ◊ A direct transmission of the backed up text file to the Driver Unit makes possible to restore the settings to the original state.
  - ◊ The response to the command TX0 does not include the parameters AO and MM. Monitor, back up and restore their settings by other means.

Category	Command
Format	**TX0**

TXT : Tell Index Time

- This monitor reports the time for positioning operation caused by a positioning command.
  - ◊ Refer to "7.3. RS-232C/USB Monitor" for details.
  - ◊ The time for positioning operation is the time form the input of an internal positioning command to the first completion of the operation.
  - ◊ The Driver Unit reset the time for every completion of the operation.

Category	monitor
Format	**TXT**
Data range	0.0 to 214 641 044.2 [ms]

P *VG : Velocity Gain*

- This parameter sets the velocity loop proportional gain.
  - ◊ Refer to "5.4.2. Setting Velocity Loop Proportional Gain (VG)" for details.

Category	Parameter
Format	**VG *data***
Data range	0.10 to 255.00
Shipping set	1.50

- If the parameter VG is changed, the parameters SG (Servo gain) will be cleared to zero (0).

P *VGL: Velocity Gain, Lower*

- This parameter set the velocity loop proportional gain for a stopping Motor in the gain switching function.
  - ◊ Refer to "8.5.4. Automatic Gain Switching" for details.
  - ◊ The automatic gains switching is effective when the parameter GP (Gain switching point" is set to [GP > 0].

Category	Parameter
Format	**VGL *data***
Data range	0.10 to 255.00
Shipping set	1.50

★★ *VL : Velocity Limiter*

- This parameter sets the limits to the velocity for a positioning operation caused by the internal commands (Positioning commands, jogging, and Home Return) and the threshold to report the abnormal velocity command in pulse train positioning operation.
- The parameter VL will be automatically set when the parameter FR (Feedback signal resolution) is specified.
  - ◊ Refer to "7.2.8.1. Resolution of Position Feedback Signal" for details.
  - ◊ The limiting velocity is to control the frequency of the position feedback signal not to exceed 781 [kHz].
- In case of the operation caused by the internal commands, the velocity is limited to the setting of the parameter VL regardless of the settings of other parameters such as the parameter MV.
- In case of the pulse train command operation, the warning C0 (Pulse command/Feedback error) occurs referring to the setting of the parameter VL as a guide.

Category	Parameter
Format	**VL *data***
Data range	0.001 to 10.000 [s^{-1}]
Shipping set	10.000

WCD : (Application use only)

- This parameter is only used for the EDD Megaterm. Do not change the setting.

WCDA: (Application use only)

- This parameter is only used for the EDD Megaterm. Do not change the setting.

WCDB: (Application use only)

- This parameter is only used for the EDD Megaterm. Do not change the setting.

WCDC: (Application use only)

- This parameter is only used for the EDD Megaterm. Do not change the setting.

WCDD: (Application use only)

- This parameter is only used for the EDD Megaterm. Do not change the setting.

★ *WD : Write Data*

- This command backs up the current settings of the parameters, programs and control inputs/outputs to the EEPROM.
  - ◊ Refer to "8.9. RS-232C Communication" for details.
- If the parameter WM (Write mode to EEPROM) is set to WM1, execution of the WD command will forcibly back up the settings to the EEPROM.

Category	Command
Format	**WD**

⚠ *Caution: For backing up all data which are currently set, it requires approximately 40 seconds. If the control power is turned off during saving the data, the alarm E2 (ROM error) may occur when the power is tuned on next time.*

★ *WM : Write Mode to EEPROM*

- This parameter decides if the parameters, programs and the setting of control inputs and outputs shall be backed up to the EEPROM.
  - ◊ Refer to "6.3.5. RS-232C Communication Positioning Operation" for details.
  - ◊ The EEPROM has the limitation on the frequency of writing and deleting. (Approximately 100 000 times) Frequent back up of the settings may shorten the operation life of the EEPROM. The parameter WM selects the necessity of backup.

Category	Parameter	
Format	**WM *data***	
Data range 1	0	: Back up to the EEPROM.
Data range 2	1	: Not back up.
Shipping set	0	

⚠ *Caution: When the setting of the WM is changed to WM1 (Not back up) to WM0 (Back up to the EEPROM), it may require approximately 40 seconds to write the all current settings to the EEPROM. If the control power is turned off during backing up, the alarm E2 (ROM error) may occur.*

• The System initializes the backed up data to the EEPROM at the execution of the command SI (Set initial parameter) even the parameter is set to WM1 (Not back up).

WO : Power on Counter Monitor

- This monitor reads out the number of turned on times of the control power.
- The power on counter is used for the time stamp to record the history of alarm occurrence.
  - ◊ Refer to "7.3.2.2. Monitor for Alarm History and Event: Monitor TA/HI" for details.

Category	Monitor
Format	**WO**
Data range	0 to 214 748 364 [times]

WVA : (Application use only)

- This parameter is used only for the EDD Megaterm. Do not change the setting.

WVB : (Application use only)

- This parameter is used only for the EDD Megaterm. Do not change the setting.

WVC : (Application use only)

- This parameter is used only for the EDD Megaterm. Do not change the setting.

WVD : (Application use only)

- This parameter is used only for the EDD Megaterm. Do not change the setting.

WWC: Multi- monitor clear

- This command cancels the multi-monitor function.
  - ◊ Refer to "4.1.4.1. Inputting a Command while Monitoring Multiple Conditions" for details.

Category	Command
Format	**WWC**

★★ *XDB : (Factory use only)*

- This parameter is for factory use only. Do not change the setting,

★★ *XDM : (Factory use only)*

- This parameter is for factory use only. Do not change the setting,

★★ *XIE : (Factory use only)*

- This parameter is for factory use only. Do not change the setting,

★★ *XIG : (Factory use only)*

- This parameter is for factory use only. Do not change the setting,

★★ *XII : (Factory use only)*

- This parameter is for factory use only. Do not change the setting,

★★ *XIL : (Factory use only)*

- This parameter is for factory use only. Do not change the setting,

★★ *XIP : (Factory use only)*

- This parameter is for factory use only. Do not change the setting,

★★ *XIR : (Factory use only)*

- This parameter is for factory use only. Do not change the setting,

★★ *XIS : (Factory use only)*

- This parameter is for factory use only. Do not change the setting,

★★ *XLF : (Factory use only)*

- This parameter is for factory use only. Do not change the setting,

★★ *XMF : (Factory use only)*

- This parameter is for factory use only. Do not change the setting,

★★ *XMM : (Factory use only)*

- This parameter is for factory use only. Do not change the setting,

★★ *XMT : (Factory use only)*

- This parameter is for factory use only. Do not change the setting,

★★ *XOL : (Factory use only)*

- This parameter is for factory use only. Do not change the setting,

★★ *XOP : (Factory use only)*

- This parameter is for factory use only. Do not change the setting,

★★ *XPA : (Factory use only)*

- This parameter is for factory use only. Do not change the setting,

★★ *XPD : (Factory use only)*

- This parameter is for factory use only. Do not change the setting,

★★ *XPN : (Factory use only)*

- This parameter is for factory use only. Do not change the setting,

★★ *XPR : (Factory use only)*

- This parameter is for factory use only. Do not change the setting,

★★ *XPS : (Factory use only)*

- This parameter is for factory use only. Do not change the setting,

★★ *XRC : (Factory use only)*

- This parameter is for factory use only. Do not change the setting,

★★ *XRI : (Factory use only)*

- This parameter is for factory use only. Do not change the setting,

★★ *XRK : (Factory use only)*

- This parameter is for factory use only. Do not change the setting,

★★ *XRO : (Factory use only)*

- This parameter is for factory use only. Do not change the setting,

★★ *XRR : (Factory use only)*

- This parameter is for factory use only. Do not change the setting,

★★ *XRT : (Factory use only)*

- This parameter is for factory use only. Do not change the setting,

★★ *XRW : (Factory use only)*

- This parameter is for factory use only. Do not change the setting.

★★ *XSY : (Factory use only)*

- This parameter is for factory use only. Do not change the setting,

★★ *XSQ : (Factory use only)*

- This parameter is for factory use only. Do not change the setting,

★★ *XTR : (Factory use only)*

- This parameter is for factory use only. Do not change the setting,

★★ *XTY : (Factory use only)*

- This parameter is for factory use only. Do not change the setting,

★★ *XUF : (Factory use only)*

- This parameter is for factory use only. Do not change the setting,

★★ *XUG : (Factory use only)*

- This parameter is for factory use only. Do not change the setting,

★★ *XVF : (Factory use only)*

- This parameter is for factory use only. Do not change the setting,

★★ *XVG: (Factory use only)*

- This parameter is for factory use only. Do not change the setting,

P *ZAS : Start Point of Zone A*

- This parameter sets the starting point of the zone A at where he output ZONEA (Zone A) closes.
  - ◊ Refer to "8.3.1. In-zone Output: ZONEA, ZONEB, and ZONEC" for details.
  - ◊ The zone A starts from the setting of the parameter ZAS (Start point of zone A) in the counting up direction (plus direction) of scale data and ends at the setting of the parameter ZAE (End point of zone A).

Category	Parameter
Format 1	**ZAS *data***
Format 2	**ZAS /ST** : Sets the current position to the start point of the zone A.
Data range	0 to 2 621 439 [pulse]
Shipping set	0
Conditions to be met	<In case of teaching by the ZAS/ST> • Alarm A0 (Position sensor error) is not occurring. • Alarm A1 (Absolute position error) is not occurring. • Alarm A4 (Over speed) is not occurring.

P ZAE : End Point of Zone A

- This parameter sets the end point of the zone A at where the output ZONEA (Zone A) opens.
  - ◊ Refer to "8.3.1. In-zone Output: ZONEA, ZONEB, and ZONEC" for details.
  - ◊ The zone A starts from the setting of the parameter ZAS (Start point of zone A)in the counting up direction (plus direction) of scale data and ends at the setting of the parameter ZAE (End point of zone A).

Category	Parameter
Format 1	**ZAE *data***
Format 2	**ZAE /ST** : Sets the current position to the end point of the zone A.
Data range	0 to 2 621 439 [pulse]
Shipping set	0
Conditions to be met	<In case of teaching by the ZAE/ST> • Alarm A0 (Position sensor error) is not occurring. • Alarm A1 (Absolute position error) is not occurring. • Alarm A4 (Over speed) is not occurring.

P ZAW : Zone A Width

- This parameter sets the minimum outputting time of the output ZONEA (Zone A).
  - ◊ Refer to "8.3.1. In-zone Output: ZONEA,ZONEB, and ZONEC" for details.
  - ◊ When the Motor passes a narrow zone in high speed, the time for outputting the ZONEA signal gets shorter. The parameter ZAW is used for reliable detection of the output signal.

Category	Parameter
Format	**ZAW *data***
Data range	0.0 to 10 000.0 [ms]
Shipping set	0.0

P ZBS : Start Point of Zone B

- This parameter sets the starting point of the zone B at where he output ZONEB (Zone B) closes.
  - ◊ Refer to "8.3.1. In-zone Output: ZONEA, ZONEB, and ZONEC" for details.
  - ◊ The zone B starts from the setting of the parameter ZBS (Start point of zone B) in the counting up direction (plus direction) of scale data and ends at the setting of the parameter ZBE (End point of zone B).

Category	Parameter
Format 1	**ZBS *data***
Format 2	**ZBS /ST** : Sets the current position to the start point of the zone B.
Data range	0 to 2 621 439 [pulse]
Shipping set	0
Conditions to be met	<In case of teaching by the ZBS/ST> • Alarm A0 (Position sensor error) is not occurring. • Alarm A1 (Absolute position error) is not occurring. • Alarm A4 (Over speed) is not occurring.

P *ZBE : End Point of Zone B*

- This parameter sets the end point of the zone B at where the output ZONEB (Zone B) opens.
  - ◊ Refer to "8.3.1. In-zone Output: ZONEA, ZONEB, and ZONEC" for details.
  - ◊ The zone B starts from the setting of the parameter ZBS (Start point of zone B) in the counting up direction (plus direction) of scale data and ends at the setting of the parameter ZBE (End point of zone B).

Category	Parameter
Format 1	**ZBE *data***
Format 2	**ZBE /ST** : Sets the current position to the end point of the zone B.
Data range	0 to 2 621 439 [pulse]
Shipping set	0
Conditions to be met	<In case of teaching by the ZBE/ST> • Alarm A0 (Position sensor error) is not occurring. • Alarm A1 (Absolute position error) is not occurring. • Alarm A4 (Over speed) is not occurring.

P *ZBW : Zone B Width*

- This parameter sets the minimum outputting time of the output ZONEB (Zone B).
  - ◊ Refer to "8.3.1. In-zone Output: ZONEA, ZONEB, and ZONEC" for details.
  - ◊ When the Motor passes a narrow zone in high speed, the time for outputting the ZONEB signal gets shorter. The parameter ZBW is used for reliable detection of the output signal.

Category	Parameter
Format	**ZBW *data***
Data range	0.0 to 10 000.0 [ms]
Shipping set	0.0

P *ZCS : Start Point of Zone C*

- This parameter sets the starting point of the zone C at where he output ZONEC (Zone C) closes.
  - ◊ Refer to "8.3.1. In-zone Output: ZONEA, ZONEB, and ZONEC" for details.
  - ◊ The zone C starts from the setting of the parameter ZCS (Start point of zone C) in the counting up direction (plus direction) of scale data and ends at the setting of the parameter ZCE (End point of zone C).

Category	Parameter
Format 1	**ZCS *data***
Format 2	**ZCS /ST** : Sets the current position to the start point of the zone C
Data range	0~2 621 439 [pulse]
Shipping set	0
Conditions to be met	<In case of teaching by the ZCS/ST> • Alarm A0 (Position sensor error) is not occurring. • Alarm A1 (Absolute position error) is not occurring. • Alarm A4 (Over speed) is not occurring.

P ZCE : End Point of Zone C

- This parameter sets the end point of the zone C at where the output ZONEC (Zone C) opens.
  - ◊ Refer to "8.3.1. In-zone Output: ZONEA, ZONEB, and ZONEC" for details.
  - ◊ The zone C starts from the setting of the parameter ZCS (Start point of zone C) in the counting up direction (plus direction) of scale data and ends at the setting of the parameter ZCE (End point of zone C).

Category	Parameter
Format 1	**ZCE *data***
Format 2	**ZCE /ST** : Sets the current position to the end point of the zone C.
Data range	0 to 2 621 439 [pulse]
Shipping set	0
Conditions to be met	• <In case of teaching by the ZCE/ST> • Alarm A0 (Position sensor error) is not occurring. • Alarm A1 (Absolute position error) is not occurring. • Alarm A4 (Over speed) is not occurring.

P ZCW : Zone C Width

- This parameter sets the minimum outputting time of the output ZONEC (Zone C).
  - ◊ Refer to "8.3.1. In-zone Output: ZONEA, ZONEB, and ZONEC" for details.
  - ◊ When the Motor passes a narrow zone in high speed, the time for outputting the ZONEC signal gets shorter. The parameter ZCW is used for reliable detection of the output signal.

Category	Parameter
Format	**ZCW *data***
Data range	0.0 to 10 000.0 [ms]
Shipping set	0.0

★P ZF : (Factory use only)

⚠ *Caution:This parameter is properly set at the factory. Never change the setting.*

Category	Parameter
Format	**ZF *data***
Data range	0 to 5
Shipping set	1

★P ZP : (Factory use only)

⚠ *Caution: This parameter is factory use only. This is for the automatic tuning function and is properly set at the factory. Never change the setting.*

Category	Parameter
Format	**ZP *data***
Data range	0.5 to 1.80
Shipping set	1.00

9.4. Parameter List

- Connect the Handy Terminal to the connector CN1. The message “NSK MEGATORQUE”will be displayed on the screen if the System is in normal condition.
- Some parameters listed in the “Table 9-10: Standard parameter settings of the Driver Unit Model EDD. ” below require changing their settings from the shipping set (initial set). Set them in accordance with the actual usage.

Table 9-10: Standard parameter settings of the Driver Unit Model EDD.

✳		Name	Parameter	Initial setting	Data range	User setting
	P	Position loop proportional gain	PG	0.001	0.001 to 10.000	
	P	Position loop proportional gain for stopping	PGL	0.001	0.001 to 10.000	
	P	Velocity loop proportional gain	VG	1.50	0.10 to 255.00	
	P	Velocity loop proportional gain for stopping	VGL	1.50	0.10 to 255.00	
	P	Observer frequency	FQ	10	0, 1 to 300	
	P	Lower gain (When the input IOFF is ON)	LG	50.00	0.00 to 100.00	
	P	Observer limiter (When the input IOFF is ON)	LB	0.00	0.00 to 100.00	
★	*P*	Torque limiter rate	TL	100.00	0.00 to 100.00	
	P	Gain switching point	GP	0	0, 1 to 2 621 439	
	P	Switching gain timer	GT	0.0	0.0 to 10 000.0	
	P	Low-pass filter OFF velocity	FO	0.000	0.000, 0.001 to 10.000	
	P	Low-pass filter, primary	FP	0	0, 10 to 1 000	
	P	Low-pass filter, secondary	FS	0	0, 10 to 1 000	
	P	Notch filter, primary	NP	0	0, 40 to 1 000	
	P	Notch filter, primary Q parameter	NPQ	0.25	0.10 to 5.00	
	P	Notch filter, secondary	NS	0	0, 40 to 1 000	
	P	Notch filter, secondary Q parameter	NSQ	0.25	0.10 to 5.00	
★	*P*	Dead band	DBP	0	0 to 4 095	
★	*P*	Observer limit	BL	100.00	0.00 to 100.00	
★	*P*	Feed forward gain	FF	1.0000	0.0000 to 1.0000	
★	*P*	(Parameter for factory use only)	ZF	1	0 to 5	
	P	Position error counter over limit	CO	200 000	1 to 2 621 439	
	P	In-position limit	IN	400	0 to 2 621 439	
	P	In-position stability timer	IS	0.0	0.0 to 10 000.0	
	P	Fin width	FW	−1.0	−10 000.0 to 10 000.0	
★	*P*	Circular resolution	CR	2 621 440	0, 1 000 to 5 242 879	
★	*P*	Pulse command	PC	0	0, 1, 4	
★	*P*	Pulse train input filter	PM	1	1, 2, 4	
★		Feedback signal leading phase	FD	0	0, 1	
★	*P*	Feedback signal Z configuration	FZ	0	0, 1	
★		Feedback signal resolution	FR	81 920	0, 1 to 5 242 880	
★	*P*	Position scale select	PS	1	1	
★	*P*	Direction inversion	DI	0	0, 1	
★	*P*	Software over travel, plus	OTP	0	0 to 2 621 439	
★	*P*	Software over travel, minus	OTM	0	0 to 2 621 439	
★	*P*	Feedback signal resolution	AO	0	0 to 2 621 439	
	P	Absolute position scale offset	MV	1.000	0.001 to 10.000	
	P	Move velocity	MA	1.0	0.1 to 800.0	
	P	Move acceleration	MB	0.0	0.0, 0.1 to 800.0	
	P	Move deceleration	JV	0.100	0.001 to 10.000	
	P	JOG velocity	JA	1.0	0.1 to 800.0	
	P	JOG acceleration	JB	0.0	0.0, 0.1 to 800.0	
	P	JOG deceleration	MD	0.0	0.0, 0.1 to 800.0	
	P	Home Return velocity	HV	0.200	0.001 to 10.000	
	P	Home Return acceleration	HA	1.0	0.1 to 800.0	
	P	Home Return deceleration	HB	0.0	0.0, 0.1 to 800.0	
	P	Home Return velocity	HZ	0.010	0.001 to 0.200	
	P	Acceleration pattern select	CSA	1	1 to 5	
	P	Deceleration pattern select	CSB	0	0, 1 to 5	

★: The password is required.
P: May be set to a program

Table 9-10: Standard parameter settings of the Driver Unit Model EDD. (Continued)

✳	Name	Parameter	Initial setting	Data range	User setting
★ *P*	Dividing number, user scale	**QR**	360 000	1 to 2 621440	
P	Sequence edit option	**OE**	0	0, 1, 2	
P	Parameter keep	**PK**	0	0, 1	
★	Program auto execution	**AE**	−1	−1, 0 to 255	
★ *P*	Origin setting mode	**OS**	6	1, 3, 4, 5, 6, 7	
★ *P*	Home Return direction	**HD**	1	0, 1	
★ *P*	Home offset	**HO**	0	0 to ±262 144 000	
★	(Parameter for factory use only)	**SQ**	0	0, 1	
P	Velocity override	**OV**	100.00	0.00 to 200.00	
P	Busy width	**BW**	0.0	0.0 to 10 000.0	
P	Near A	**NA**	0	0 to 262 144 000	
P	Near B	**NB**	0	0 to 262 144 000	
P	Start point of zone A	**ZAS**	0	0 to 2 621 439	
P	Med point of zone A	**ZAE**	0	0 to 2 621 439	
P	Zone A width	**ZAW**	0.0	0.0 to 10 000.0	
P	Start point of zone B	**ZBS**	0	0 to 2 621 439	
P	Med point of zone B	**ZBE**	0	0 to 2 621 439	
P	Zone B width	**ZBW**	0.0	0.0 to 10 000.0	
P	Start point of zone C	**ZCS**	0	0 to 2 621 439	
P	Med point of zone C	**ZCE**	0	0 to 2 621 439	
P	Zone C width	**ZCW**	0.0	0.0 to 10 000.0	
P	Tell position error, under	**TEU**	0	0 to 2 621 439	
P	Tell position error, over	**TEO**	0	0 to 2 621 439	
P	Tell velocity, user	**TVU**	0.000	0.000 to 10.000	
P	Tell velocity, over	**TVO**	0.000	0.000 to 10.000	
P	Tell velocity error, over	**TVEU**	0.000	0.000 to 10.000	
P	Tell torque command, under	**TVEO**	0.000	0.000 to 10.000	
P	Tell torque command, over	**TTU**	0.00	0.00 to 100.00	
P	Tell thermal, under	**TTO**	0.00	0.00 to 100.00	
P	Tell thermal, over	**TJU**	0.00	0.00 to 100.00	
P	Monitor, primary	**TJO**	0.00	0.00 to 100.00	
P	Tell velocity error, over	**MN**	0	0 to 8 (or command name)	
P	Monitor range, primary	**MNR**	10.000	(Depends on MN setting)	
P	Monitor offset, primary	**MNY**	0.000	(Depends on MN setting)	
P	Monitor, secondary	**MX**	0	0 to 8 (or command name)	
P	Monitor range, secondary	**MXR**	10.000	(Depends on MX setting)	
P	Monitor offset, secondary	**MXY**	0.000	(Depends on MX setting)	
★ *P*	Multi-monitor mode	**MM**	1	0, 1	
★ *P*	Backspace mode	**BM**	1	0, 1	
★	Write mode to EEPROM	**WM**	0	0, 1	
★ *P*	End code	**EC**	0	0, 1	
P	Monitor refresh rate	**MR**	0.0	−1.0, 0.0 to 10 000.0	
★ *P*	Parameter prompt	**PP**	1	0, 1	
★	Version display at power on	**OD**	1	0, 1	
★ *P*	Load inertia	**LO**	0.000	0.000 to 4 000.000	
P	Servo gain	**SG**	0	0, 1 to 250	
★ *P*	(Parameter for factory use only)	**ZP**	1.00	0.50 to 1.80	
★ *P*	Control mode	**SL**	3	1 to 3	
★ *P*	Analog command input selection	**AC**	0	−1 to 1	
★ *P*	Analog command gain	**AG**	1	0.0001 to 2.0000	
★ *P*	Analog command offset	**AF**	0	−3276 to 3276	
★ *P*	Analog command dead band	**DBA**	0	−1023 to 1023	
P	Analog command low-pass filter frequency, primary	**AFP**	200	0, 10 to 1000	
P	Analog command low-pass filter frequency, secondary	**AFS**	0	0, 10 to 1000	
P	Soft start	**SF**	0	0 to 100000	

★: The password is required.
P: May be set to a program

(Blank Page)

10. Maintenance

10.1. Backup Parts

◆ Motor and Driver Unit

- We recommend keeping the backup of Motor and Driver Unit for a quick recovery for an unexpected failure of the System.

◆ Parameter and program data backup

- We recommend keeping the note of all parameter settings and programs for an unexpected failure of the Driver Unit.
  - ◊ However, the parameters AO (Absolute position scale offset) and MM (Multi-line mode) must be written down separately.
  - ◊ Refer to "Appendix 3: How to Back up and Restore the Settings of Parameters and Programs" for details.
  - ◊ EDD Megaterm, application software compatible with Windows™ 7/10, is available for the backup.
- If the backup with a personal computer is not available, read out the settings by the following commands and write down the settings on the list provided on the last page of this manual.
  (Appendix 9: Setting List of Parameter and Program of Driver Unit Model EDD)
  - ◊ Parameter settings : Command TS (Tell settings)
  - ◊ Programs : Command TC (Tell channel program)
  - ◊ Settings of control Input and Output
    : Commands TPI (Tell input port) and TPO (Tell output port)

10.2. Storing the Parts

- Store the Motor, the Cables and the Driver Unit in clean and dry condition. Put a cover on the Driver Unit to avoid contamination.

Table 10-1: Storing condition

Item	Storing condition	Remarks
Motor	Temperature: 0 to 40 [°C] Humidity: 20 to 80%	• Indoor use only. • Free from dust, condensation and corrosive gas • Protection code: IP30 equivalent
Driver Unit	Temperature: –20 to 70 [°C] Humidity: 90% or less	• Indoor use only • Free from dust, condensation and corrosive gas

10.3. Periodic Check

10.3.1. Motor

⚠ *Caution :Never disassemble the Motor and the resolver.*

- The table below shows the checklist of periodic maintenance.
  - ◊ The checking interval shown in the table is for reference only. It should be decided according to the actual use conditions and environment.
- You do not require replenish the grease of the bearing.
- We cannot repair the Motors at the User's site regardless of the level of failure. If any problem was found by the periodic check, please consult with NSK sales or representative.

Table 10-2: Periodic Check of Motor

Item	Checking interval	How to check	Remarks
Vibration/Noise	Daily	• Hearing	• No difference with normal state.
Appearance	Depending on the degree exposed to contamination	• Wipe off or blow off contaminants.	–
Insulation	Once a year	• Disconnect the Driver Unit, then check the resistance between the Motor coil and the ground earth with a 500v megohmmeter.	• Resistance ≥ 2 MΩ Refer to "Appendix 2."
Play in bearing	Once a year	• Apply repetitive moment load less than the limit, and feel play of the bearing.	• No play by the feel.

10.3.2. Driver Unit (Including Cables and Handy Terminal)

⚠ *Caution :Do not disassemble the Driver Unit.*

- High residual voltage may exist inside the Driver Unit for a while after the power is turned off. (In such a case, "CHARGE LED" is on.)

- The daily check of the Driver Unit is not necessary because of the use of highly reliable semiconductors. The checks shown in Table 10-3 require at least once a year.

Table 10-3: Periodic check of Driver Unit

Item	Interval	Checking point	Remarks
Retighten screws	Once/year	Terminal block screws. Connector fixing screws.	–
Cleaning	Once/year	Remove dust or contaminants outside of Driver Unit.	–
Cable check	Once/year	Visually check any damages or cracks.	Especially when you force to bend and twist the cables, increase the checking interval depending on the conditions.

10.4. Periodic Replacement of Parts

10.4.1. Motor

- There are no parts that require periodic replacement in general use.
- If a Motor requires repair service, please consult with NSK sales or representative. Any repair service at the User's site is not available.

10.4.2. Cables

- There are no parts that require periodic replacement in general use.
- If the cables are used in the following environments that induce deterioration with age, we recommend replacing the cables periodically, considering that they are expendables.
  - ◊ When the cables are exposed to the following materials or environment:
    - Materials: Oil or chemicals
    - Environment: Highly humid, high or low temperature, and vibration.
  - ◊ When a cable is forcibly dragged or bent.
  - ◊ A cable is fixed in a way so that the force to the cable is concentrated on one point.
  - ◊ A cable is put in a cable truck that has less room than normal.
- We are sorry that repair service of a cable is not available.
  - ◊ When only a part of cable between the connectors is damaged, we cannot repair that part only. We have to replace the whole cable.
  - ◊ If the end part of a cable such as a connector is damaged, the accumulated repair cost, which includes the cost for repair work and parts, and other charges, exceeds the cost of a new cable.

10.4.3. Driver Unit

◆ Electrolytic capacitor

- Life of the electrolytic condenser largely depends on use conditions. The life of electrolytic capacitor is approximately 10 years under the condition below. However, we do not guarantee the life of 10 years even the conditions belows are met, since the unknown electrical over stress may be applied to the capacitor.
- We do not replace the electrolytic capacitor only. Please consult with NSK sales or representative for replacement.

Table 10-4: Approximated life of electrolytic capacitor

Name of part	Function	Approximated life	Use conditions
Electrolytic condenser	• Smoothes power voltage. • Others	10 years * This is not the guaranteed life.	• Annual average of ambient temperature: 30[[[°C]]] or less • Average load factor: 80% or less • Average daily operation time: 20 hours or less

*These are not guaranteed values.

◆ Relays

- The Driver Unit contains two relays. Approximated life is 100 000 times of switching.
- We do not replace a relay only. Please consult with NSK sales or representative. It requires replacing the printed circuit board.

Table10-5: Rough idea of life (Relays)

Item	Approx. life	Definition to count the number of switching	
Relay	100 000 times	Relay 1	One time: Each switching of servo ON/OFF.
		Relay 2	One time: Each activation of the dynamic brake (Servo ON/OFF, Alarm/Reset)

◆ EEPROM

- The Driver Unit Model EDD has an EEPROM for the data backup. The limitation on the number of times for writing and deleting is approximately 100 000.
  - ◊ The alarm E2 (ROM error) occurs when the EEPROM reaches its life.
  - ◊ The EEPROM does not require any battery for data backup.
- We do not replace the EEPROM itself. The Driver Unit must be replaced when the life of the EEPROM has come to end.
- The EEPROM backs up the settings at the events described in "Table 10-6: Timing for writing data to the EEPROM."
  - ◊ When setting the same data repeatedly, it is not necessary to change the data, thus actual data backup won't be performed.
  - ◊ When the master controller frequently changes parameters in the middle of operation, we recommend setting the parameter WM1 (Prohibit to back up data). However, if you require backing up the settings, execute the command WD (Write data) before turning the power off. It requires approximately 40 seconds for the backup. Do not turn off the power in the middle of backing up the data.

Table 10-6: Timing for writing data to the EEPROM

Event	Object of backup	Way to prohibit the data backup	At the end of life of the EEPROM
Turning on the control power	Number of times for power on	None	• Readouts of the command TA/HI (Read out alarm history) may not be correct. • All the other parts will operate normally.
Occurrence of an alarm	Occurrence history of an alarm		
Setting of the home position	Setting history		
	Parameter AO (Absolute position scale offset)		The EEPROM cannot correctly back up the parameter AO, and thus the alarm E2 (ROM error) occurs.
• Setting of parameter • Editing program • Setting of function to the ports of input and output.	Setting data	Set the parameter WM (Write mode to EEPROM) to WM1 (Prohibit data backup)	All settings won't be correctly backed up, and consequently the alarm E" (ROM error) occurs.

◆ When replacing the Driver Unit

- Because the standard Driver Units Model EDD are interchangeable each other, simply replace with the new Driver Unit that has the same reference number, then reset the all settings of parameters and programs.
  - ◊ In case of a special Driver Unit, please refer to the specification documents for interchangeability.

10.5. Repair Service

- Please return the product when it requires service. In general, any repair service at the user's site is not available.
- Please return us the NSK products only. When the NSK products are returned with jigs, cables or the like, that are installed or attached to them by the user or a system integrator, NSK Ltd. shall not be liable for loss or damage of these parts.
- We presuppose that the returned unit for repair will be replaced with the new units.
    - ◊ The actual costs of examination, repair work, and parts generally exceed the cost of new unit.

10.6. Warranty Period and Covering Range

10.6.1. Warranty Period

- The warranty period is either one year from delivery or 2 400 hours of operation, whichever comes first.

10.6.2. Limited Warranty

- The warranty is limited to the products supplied by NSK Ltd.
- The defective products will be repaired free of charge within the applicable warranty period.
- Repairs after the expiration of the applicable warranty period will be subject to payment.

10.6.3. Immunities

- The product is not warranted in one of the following cases even within the warranty period:
  - ◊ Failure of the unit due to installation and operation not in accordance with the instruction manual specified by the supplier.
  - ◊ Failure of the unit due to improper handling and use, modification and careless handling by the user.
  - ◊ Failure of the unit due to the causes other than those attributable to the supplier.
  - ◊ Failure of the unit due to modification or repair that is conducted by a person(s) or party (ies) other than the supplier.
  - ◊ Other types of failures due to natural disasters and accidents (causes not attributable to the responsibility of the supplier).
- Damages induced by a failure of the supplied unit are not covered.

10.6.4. Service Fee

- Prices of goods do not include any applicable service charges, such as the dispatching of engineers.
- Startup or maintenance services that require the dispatching of engineers are subject to payment even during the applicable warranty period.
- Service charges will be invoiced in accordance with the supplier's standard service charge list.

10.6.5. Notice for discontinuity of the Product and Duration of Support

- We will notify you at least 1 year prior to the discontinuity of the product. The duration of support will be five years after the discontinuity of the product.

10.6.6. Application to special uses

- This product is intended for general industrial use. It was not designed or manufactured for uses that may pose serious risk to people's lives or property. It cannot be adapted for special uses such as nuclear control, explosive/corrosive/poisonous material handling devices, safety devices, and their systems.
- Please contact NSK Ltd. in advance before using this product for aeronautical devices, transport devices, and medical devices.
- While this product is manufactured under strict quality controls, NSK recommends that an appropriate safety device be installed when used with equipment that could cause serious accidents or damage in the event of product failure.

(Blank Page)

11. Alarm and Warning

11.1. Identifying Alarm and Warning

- If an error occurs in the Megatorque Motor System, the Driver Unit Model EDD gives an alarm or a warning.

Table 11-1: Category of abnormality and condition of the System

Error state	Seriousness	Output signal	Motor condition	Recovery
Alarm	Reports an occurrence serious problem and input of emergency stop	DRDY output opens*.	Motor servo off	• Power off. • In case of an emergency stop, clear the input EMST.
Warning	Reports an occurrence of minor problem that can be easily rectified.	WRN output opens*.	Depends on a warning.	• You can clear a warning with the input ACLR, the command CL and a reset of power (Off→On). However, it is necessary to remedy the cause.
Over travel limit	Reports one of the over travel limits is activated.	Either one of OTPA or OTPM*, from which the Motor entered, opens*.	Stops immediately. Input of limit direction is not accepted.	• Move the Motor out of the off limits area.

* When the setting of logic is the shipping set

11.1.1. LED Alarm Indicator

- Turn on the power and confirm the 7 segments LED (alarm indicator) on the front panel of the Driver Unit for the condition of the System. If it is in the state shown in the Figure 11-1 below, an alarm or warning is occurring.
  - ◊ If the parameter LED (LED mode) is set other than LM0, the alarm indicator does not report the occurrence of alarm or warning. (In such a case, it shows the state of the settings of the control inputs and outputs.)

Fig 11-1: When error occurs

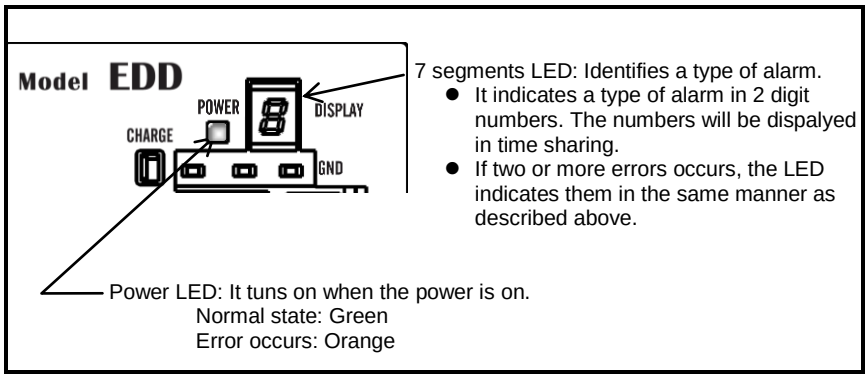

Fig 11-2: In normal state

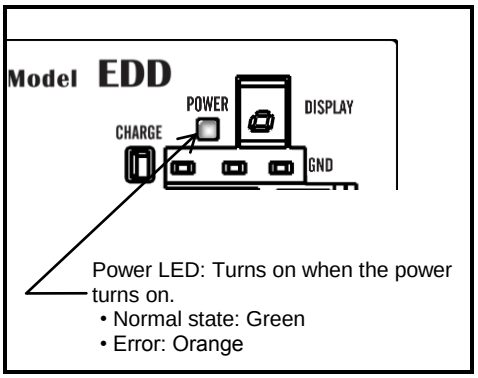

Fig 11-3: Example of simultaneous occurrence of the alarm F3 and F4.

(Hardware over travel limit and Emergency stop)

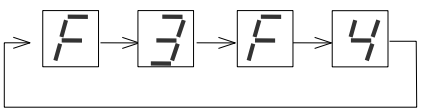

11.1.2. Confirmation of Alarm and Warning

- The monitor TA reports the current status of alarm and warning.

(1) Input the monitor TA.

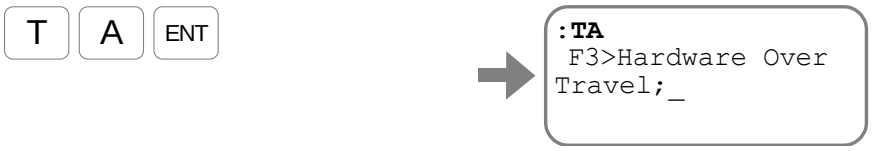

The System reads out the current status of alarm and warning. There is no indication when no alarm or warning is reported.

(2) Every input of the [SP] key scrolls down to the next readout.

Keep pressing the [SP] key to monitor all alarms or press the [BS] key to quit monitoring.

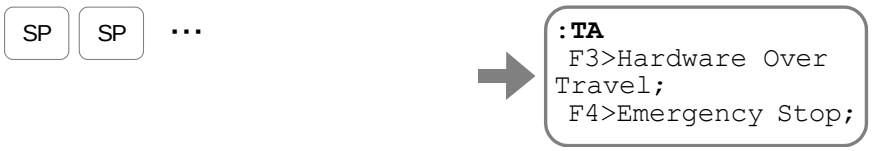

The indicator shows that the alarm F3 (Hardware over travel) and the alarm F4 (Emergency stop) are occurring.
*The monitoring order of alarms does not correspond to the order of occurrence.

11.1.3. History of Alarm and Warning

- You can monitor the history of alarms, warnings and events that have occurred.
  The Driver Unit stores the maximum of 32 records of alarms, warning and events.

  ◊ When the 33rd alarm is occurred, the Driver Unit deletes the first history record and adds the record of the 33rd alarm to the end of the list.

⚠ *Caution :The history of alarms and warnings may not be properly recorded if the control power is turned off immediately after their occurrence.*

- The following are the contents of the record.

  (1) History record number (The latest alarm is numbered to 1 [one].)

  (2) Codes for alarms and warnings and sub codes. (A part of the sub codes is used for our analysis.

  (3) Time of occurrence (Elapsed time from the power-on) and number of times of power-on.

  ◊ From the record of the time of occurrence, you can figure out whether an alarm occurred right after the power was turned on, or it has been occurring continuously.

- The following describes how to monitor the history of alarms.

  (1) Input the command TA/HI (Tell alarm status).

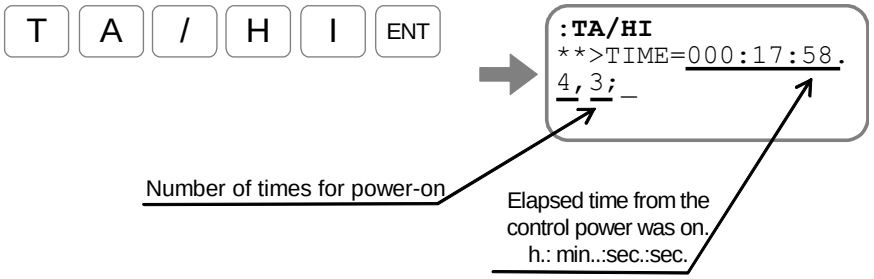

  The elapsed time from the control power is turned on and the current number of times of power-on.

  (2) Every input of the [SP] key will monitor the next line.

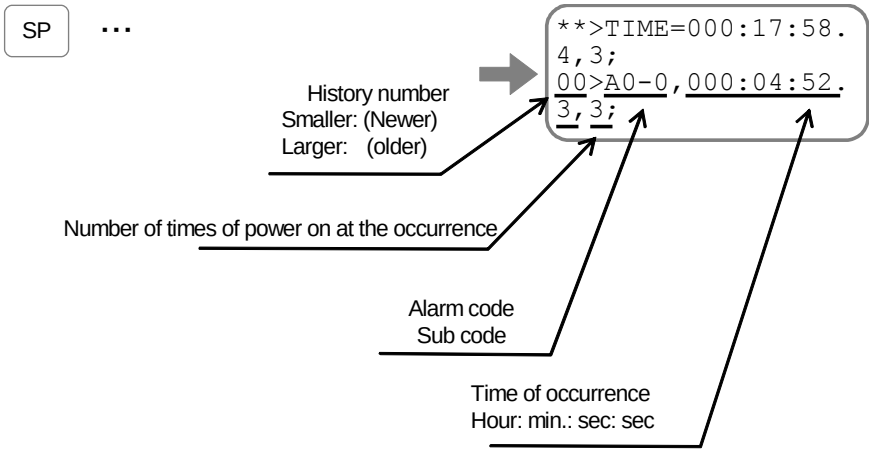

  Keep pressing the [SP] key to monitor all alarms or press the [BS] key to quit monitoring.

- The table below lists the alarms and warnings that won't be recorded to the alarm history.

Table 11-2: Alarms and warnings that won't be recorded to the alarm history

7 segments LED	Command TA: Tell alarm	Description	Motor condition
C3	**C3>CPU Error***	CPU error	Servo-off
E0	**E0>RAM Error**	RAM error	
E2	**E2>ROM Error***	ROM error	
F2	**F2>Software Over Travel**	Software over travel limit is activated.	Servo-lock
F3	**F3>Hardware Over Travel**	Hardware over travel limit is activated	
F4	**F4>Emergency Stop**	The input of EMST is ON.	Servo-off
P3	**P3>Control AC Line Under Voltage**	Control power falls below the limit.	

*It may be recorded to the alarm history depending on the details of alarm.

- When the home position is reset by the command AZ (Absolute ZERO position set) or the Home Return operation, the event code "NO" is recorded: However this is not abnormal.

  ◊ Refer to "7.3.2.2. Monitor for Alarm History and Event: Monitor TA/HI" for details.

11.2. List of Alarm and warning

11.2.1. Normal State

- The table below shows the condition of the System when the input SVON (Servo on) is activated and the System is ready for the operation command, the System.
  - ◊ For the execution of operation, clear the input STP (Stop).

Table 11-3: The condition for command acceptance

POWER LED	7-seg. LED	Output DRDY	Output WRN	Output OTPA and OTMA	Output SVST	Motor condition
Green	□	Close	Closed	Closed	Closed	Servo-on

⚠ *Caution :The outputs DRDY (Driver ready), WRN (Warning) and OTPA/OTPM (Travel limit) are normally closed and they open for reporting abnormality.*

- The shipping set of the outputs WRM and OTPA/OTMA is negative logic.

- If the Motor does not move even no alarm or warning is reported, the System may be in the condition shown in "Table 11-4: condition when the Motor does not move even in normal state."
  - ◊ In the condition shown in the table below, the Motor gets in the servo-off state and the dynamic brake is functioning to brake the Motor.
  - ◊ When the initialization of the CPU takes longer than 10 seconds at the power-on, the control circuit is not functioning normally. Refer to "11.3.1. CPU Error" for the cause and remedy.

Table 11-4: condition when the Motor does not move even in normal state

POWER LED	7-seg. LED	Output DRDY	Output WRN	Output OTPA and OTMA	Output SVST	Motor condition	System condition	Cause	Remedy
Off	Off	Open	Open	Open	Open	Servo-off	The power is not turned on.	The power is not turned on.	Turn on the power
Orange	Off	Open	Open	Open	Open	Servo-off	Initializing CPU	The power is on, but the CPU is being initialized.	Wait for about 3 seconds
Green	□	Closed	Closed	Closed	Open	Servo-off	Servo-off	The input SVON is not activated.	Activate the input SVON.
								The input SVON is on, but the servo is not on yet.	Wait until the output SVST closes.

11.2.2. Condition in the State of Alarm and Warning

- The Driver Unit reports three kinds of abnormality.
  - ◊ Alarm : Abnormal state in which the System cannot continue the operation.
  - ◊ Warning : Abnormality that can be avoided by changing the way of operation or tuning of parameters.
  - ◊ Over travel limit: Hardware over travel limit and software over travel limit
- For reporting abnormal state, the power LED on the front panel of the Driver Unit turns in orange and the 7 segments LED identifies the abnormality.

11.2.2.1. Alarm

- Reports occurrence of serious problem or in the state of Emergency stop.
  - ◊ When an alarm is detected, the output DRDY opens, the condition of the Motor changes to servo-off state, and the Dynamic brake functions to stop the Motor.
  - ◊ In case of emergency stop, the state of alarm can be cleared by deactivation of the input EMST. In case of other alarms, it is necessary to turn off the power and remedy the cause. (When the part of the System is defective, some alarm cannot be cleared.)

Table 11-5: Alarm

7-seg. LED	Readout of the Command TA (Tell alarm)	Name	Motor condition	Output DRDY	Output WRN	Output OTPA OTMA	Alarm history	Alarm clear
–	–	(CPU not functioning)	Servo-off	Open	Open	Open	–	–
A0	**A0>Position Sensor Error**	Disconnected sensor cable	Servo-offOpen	Open	–	–	✓	–
A1	**A1>Absolute Position Error**	Position data error	Servo-off	Open	–	–	✓	–
A2	**A2>Motor Cable Disconnected**	Disconnected Motor cable	Servo off	Open	–	–	✓	–
A4	**A4>Over Speed**	Excess velocity	Servo-off	Open	–	–	✓	–
A9	**A9>Commutation Error**	Commutation error	Servo-off	Open	–	–	✓	–
C3	**C3>CPU Error**	CPU error	Servo-off	Open	–	–	✓*1	–
E0	**E0>RAM Error**	RAM error	Servo-off	Open	–	–	–	–
E2	**E2>ROM Error**	ROM error	Servo-off	Open	–	–	✓*1	–
E7	**E7>System Error**	System error	Servo-off	Open	–	–	✓	–
E8	**E8>I/F Error**	Interface error	Servo-off	Open	–	–	✓	–
E9	**E9>ADC Error**	ADC error	Servo-off	Open	–	–	✓	–
F4	**F4>Emergency Stop**	Emergency stop	Servo-off	Open	–	–	–	✓*2
P0	**P0>Over Heat**	Over heat	Servo-off	Open	–	–	✓	–
P1	**P1>Main AC Line Over Voltage**	Excess voltage	Servo-off	Open	–	–	✓	–
P2	**P2>Over Current**	Excess Motor current	Servo-off	Open	–	–	✓	–
P3	**P3>Control AC Line Under Voltage**	Low control power voltage	Servo-off	Open	–	–	✓	–
P9	**P9>Power Module Alarm**	Power module alarm	Servo-off	Open	–	–	✓	–

*1: Back up only recordable history.

*2: Can be cleared by a deactivation of the input EMST.

11.2.2.2. Warning

- Reports an occurrence of abnormality that can be easily rectified.
  - ◊ When a warning is given the output WRN (Warning) closes if the shipping set of the output logic is set to negative. The condition of the Motor depends on the type of warning. For a warning that deactivates the Motor servo, the dynamic brake functions to stop the Motor.
  - ◊ A warning can be cleared by the input ACLR (alarm clear) or the command CL (Alarm clear) after remedying the cause.

Table 11-6: Warning

7-seg. LED	Readout of the Command TA (Tell alarm)	Description	Motor condition	Output DRDY	Output WRN	Output OTPA OTMA	Alarm history	Clear
A3	**A3>Over Load**	Software thermal over	Servo-off	–	Open	–	✓	✓
A5	**A5>Origin Undefined**	Hone position undefined	Does not change	–	Open	–	✓	✓
C0	**C0>Pulse Command/Feedback Error**	Error in the commanded position or the feedback signal.	Servo-off	–	Open	–	✓	✓
F1	**F1>Excess Position Error**	Excess position error	Servo-off	–	Open	–	✓	✓
F5	**F5>Program Error**	Program error	Cycle stop*1	–	Open	–	✓	✓
F8	**F8>AT Error**	Automatic tuning error	Cycle stop*1	–	Open	–	✓	✓
P5	**P5>Main AC Line Under Voltage**	Low voltage of main power	Servo-off	–	Open	–	✓	✓

*1: When the warning F5 (Program error) or the warning F8 (Auto tuning error) is given in the middle of Motor operation, the Motor stops after the completion of current operation.

11.2.2.3. Over Travel Limit

- Reports the condition on both software and hardware over travel limit.
  - ◊ If the shipping set of the port polarity is set to negative logic, the output OTPA or the output OTPM closes when one of them is activated by the Motor. After this moment, the System accepts only the command to move out the off limits area.
  - ◊ The alarm will be cleared when the Motor gets out of the off limits area.

Table 11-7: Over travel limit

7-seg. LED	Readout of the Command TA (Tell alarm)	Name	Motor condition	Output DRDY	Output WRN	Output OTPA OTMA	Alarm history	Clear*1
F2	**F2>Software Over Travel**	Software over travel limit	Only accepts the command for moving out of the limit	–	–	Open	–	✓
F3	**F3>Hardware Over Travel**	Hardware over travel limit		–	–	Open	–	✓

*1: The warning can be cleared when the Motor gets out the area by a positioning command, Jogging command or manual rotation of the Motor of which servo is deactivated.

11.3. Cause and Remedy

11.3.1. CPU Error

- The CPU integrated into the Driver Unit controls various types of operation. This alarm reports that the CPU is not properly functioning.

Table 11-8: Cause and remedy for CPU error alarm

Cause	Remedy
(1) The CPU is not functioning due to noise.	• Restart the power • Take measures against noise.
(2) Defective Driver Unit	• When it does not recover by the reset of power, the Driver Unit may be defective. Replace it referring to "Appendix 5: Procedure for Replacing Driver Unit Model EDD," if necessary.

11.3.2. Alarm A0: Disconnected Sensor Cable

- The PS/PN/PX series Motor integrates with two types of position sensor: absolute position sensor and incremental position sensor. This alarm reports disconnection of the cable of these sensors.
  - ◊ The Driver Unit reports disconnection of the absolute sensor cable only when the control power is turned on.
  - ◊ For the incremental position sensor, the alarm will be always made at an occurrence.

Table 11-9: Cause and remedy for the alarm A0

Cause	Remedy
(1) Resolver cable disconnected.	• Check the resolver cable for proper connection.
(2) Defective resolver cable	• Visually check the cable for damage. • Replace the Motor or the resolver cable if necessary. Refer to "Appendix 2: How to Check Motor Condition".
(3) Defective resolve winding	
(4) Defective Driver Unit	• If it does not recover with above measures, the Driver Unit may be defective. Replace it referring to "Appendix 5: Procedure for Replacing Driver Unit Model EDD," if necessary.

(1) Refer to "2.6.3. Cable Set" for the bending radius of the resolver cable. Refer to "2.6.1. Megatorque Motors" for the resolver cable that is integrated with the Motor.
A too far small bending radius may cause a break in the cable.

(2) Do not fix the cable in the way that results in the force concentration on one area because it may cause a cable break.

(3) When tie wrap the cables, be careful not to tie them tightly. Otherwise it may break inside of the cables, even the cable itself look normally.

(4) When the cables are put in a cable carrier, the share of total cables shall be equal to or less than 50% of the inside area of a cable carrier. Do not put too much cable in it. Otherwise damage on the cable coating may occur and may lead to internal cable break. Fix the cable to the cable carrier at its entry and exit so that the force to the connecters is minimal.

11.3.3. Alarm A1: Position Data Error

- When the control power of the Driver Unit is turned on, the System checks the absolute position of the Motor.
  This alarm reports that the checking of Motor position does not have properly executed because the Motor moved when the control power was turned on.

Table 11-10: Cause and remedy for the alarm A1

Cause	Remedy
(1) The Motor moved when the power is on.	• Reset the power (Off → On).
(2) Defective cable, Motor, or Driver Unit. .	• Follow the checking described in "Appendix 2: How to Check Motor Condition" to check the Cables and the Motor. Replace them if necessary. • If above check is not satisfactory, it may require replacing the Driver Unit. Refer to "Appendix 5: Procedure for Replacing Driver Unit Model EDD," and replace it.

(1) If the Motor moves because of motion of other unit and thus the alarm occurs, change the timing of turning on the control power of the Driver Unit.

11.3.4. Alarm A2: Motor Cable Disconnected

- The Driver Unit supplies to the Motor winding for its rotation.
  The alarm occurs when the current does not flow through the Motor winding even the command for the Motor motion has been inputted, and thus detects a break in the motor cable.

Table 11-11: Cause and remedy for the alarm A2

Cause	Remedy
(1) Motor cable disconnected.	• Check the Motor cable for proper connection.
(2) Defective Motor cable	• Visually check the cable for damage. • Replace the Motor or the Motor cable if necessary. Refer to "Appendix 2: How to Check Motor Condition".
(3) Defective Motor winding	
(4) Defective Driver Unit	• If it does not recover with above measures, the Driver Unit may be defective. Replace it referring to "Appendix 5: Procedure for Replacing Driver Unit Model EDD," if necessary.

(1) Refer to "2.6.3. Cable Set" for the bending radius of the Motor cable. Refer to "2.6.1. Megatorque Motors" for the Motor cable that is integrated with the Motor.
A too far small bending radius may cause a break in the cable.

(2) Do not fix the cable in the way that results in the force concentration on one area because it may cause a cable break.

(3) When tie wrap the cables, be careful not to tie them tightly. Otherwise it may break inside of the cables, even their outside look normally.

(4) When the cables are put in a cable carrier, the share of total cables shall be equal to or less than 50% of the inside area of a cable carrier. Do not put too much cable in it. Otherwise damage on the cable coating may occur and may lead to internal cable break. Fix the cable to the cable carrier at its entry and exit so that the force to the connecters is minimal.

11.3.5. Warning A3: Software Thermal

- The Driver Unit is estimating the heat generation and radiation of the Motor based on the current flowing through the Motor windings.
  The warning occurs when the estimation of heat generation exceeds the threshold.

Table 11-12: Cause and remedy for the warning A3

Cause		Remedy
(1)	Unmatched combination of Motor and Driver Unit.	• Check for proper combination
(2)	Excessive load	• When this warning occurs within few seconds: Check for mechanical restraint that causes high friction resistance or locks the Motor motion. • Review load conditions. (Reduce load inertia.) • Increase idle time. • Readjust acceleration/deceleration parameters. In case of the pulse train command operation, adjust the parameter settings of master controller.)
(3)	Mechanical restraint to the Motor such as brake	
(4)	Excessive Motor duty cycle.	
(5)	Vibration caused by poor adjustment of servo parameters	• Set the servo parameters properly. (Refer to "5. Tuning.")
(6)	Defective cable, Motor or Driver Unit	• Follow "Appendix 2: How to Check Motor Condition" for checking their conditions. Replace the cable or the Motor if necessary. • If above procedures do not work, the Driver Unit may be defective. Replace it referring to "Appendix 5: Procedure for Replacing Driver Unit Model EDD," if necessary.

(1) Do not turn off the control power at the occurrence of this warning.

◊ If the control power is turned off, the estimated value of heat generation is cleared and the Driver Unit won't detect the existence of heat generation at the next power-on. When this situation is repeated, the Driver Unit won't be able to detect the warning even the heat is actually accumulated to dangerous level.

(2) The input ACLR (Alarm clear) input or the command CL (Clear alarm) clears the warning. However, it requires a sufficient air cooling of the Motor before resuming the operation because the Motor winding remains in the high temperature state. It also requires removing the cause of overheat as well.

11.3.6. Alarm A4: Excess Velocity

- This alarm detects that the Motor has continuously rotated faster than the velocity of 11.4 [s^{-1}] for 10 milliseconds or over, exceeding its maximum rotational speed 10 [s^{-1}].

Table 11-13: Cause and remedy for the alarm P4

Cause		Remedy
(1)	Unmatched combination of Motor and Driver Unit.	• Check for proper combination
(2)	Motor velocity has exceeded the limit due to external disturbance.	• Check for cause of the external disturbance.
(3)	Velocity has reached the limit due to overshooting.	• Refer to "5. Tuning". • Reduce the parameter settings of acceleration and deceleration.
(4)	Defective cable, Motor or Driver Unit.	• Follow "Appendix 2: How to Check Motor Condition" for checking their conditions. Replace the cable or the Motor if necessary. • If above procedures do not work, the Driver Unit nay be defective. Replace it referring to "Appendix 5: Procedure for Replacing Driver Unit Model EDD."

(1) The maximum rotational speed setting of parameters such as the parameter MV is 10 [s^{-1}]. However the maximum rotational speed depends on each Motor model. Refer to "2.5. Motor Specifications" and set the operating velocity not to exceed the specification.

11.3.7. Warning A5: Home Position Undefined

- In case of absolute positioning operation, the Driver Unit specifies the target position in accordance with the preset home position.
  This warning occurs when the command for absolute positioning operation is inputted even the home position is not yet defined.

  ◊ The state of undefined home position occurs when the Home Return operation is interrupted even the command has been executed.

Table 11-14: Cause and remedy for the warning A5

Cause		Remedy
(1)	The command for absolute positioning operation is inputted after an interruption of Home Return operation.	• Complete the Home Return operation.

(1) The input ACLR or the command CL clears the warning.

11.3.8. Alarm A9: Commutation Error

- The Driver Unit checks if the Motor operates normally at the moment of the first servo activation after the power is turned on.
  This alarm occurs when the Motor moves exceeding ± 15° (angle degree) at this moment.

Table 11-15: Cause and Remedy for the Alarm A9

Cause		Remedy
(1)	Unmatched combination of Motor and Driver Unit.	• Check for proper combination
(2)	The Motor moves when the servo is turned on because of external force.	• Remove the cause of external force. • Refer to "5. Tuning" if the Motor is affected by the gravity because its axis is horizontal.
(3)	Defective cable, Motor or Driver Unit.	• Follow "Appendix 2: How to Check Motor Condition" for checking their conditions. Replace the cable or the Motor if necessary. • If above procedures do not work, the Driver Unit nay be defective. Replace it referring to "Appendix 5: Procedure for Replacing Driver Unit Model EDD."

11.3.9. Warning C0: Position Command/Feedback Signal Error

- This warning occurs when the transient velocity command is excessive in a pulse train command or the position feedback output signal frequency is abnormal.
  - ◊ The command TA/HI (Tell alarm history) will identify the cause of the warning.

- In the pulse train input operation, the Driver Unit creates the transient parameter CR (Circular Resolution) in accordance with inputting pulses. The transient velocity command gets excessively high when the inputting pulse frequency is higher than the setting of parameter CR (Circular Resolution), which is set relatively lower to make the Motor one revolution with fewer pulses.

- When the parameter FR (Feedback signal resolution) is specified, the parameter VL (Velocity limiter) is automatically set. If the actual velocity exceeds the limit, the position feedback signal may not be outputted correctly.
  This alarm occurs when the operating condition does not meet to output the correct position feedback signal.
  - ◊ The transient velocity command in the pulse train input is too high.
  - ◊ Impossible to output the position feedback signal due to excessive motor velocity.

Table 11-16: Cause and remedy for the warning C0

Alarm history	Cause	Remedy
C0 – 0	The transient velocity command exceeds 30 [s^{-1}].	• Decrease the frequency of pulse train input. • Increase the resolution of the parameter CR (Circular Resolution).
C0 –1	The transient velocity command exceeding 1.5 times of the setting of parameter VL(Velocity limiter) is inputted longer than 1 [ms] continuously.	• Decrease the frequency of pulse train input. • Increase the resolution of the parameter CR (Circular Resolution). • Decrease the setting of parameter FR (Feedback signal resolution).
C0 – 2	The frequency of position feedback signal exceeded tolerance.	• Decrease the setting of parameter FR (Feedback signal resolution). • Decrease the Motor velocity. Decrease the frequency of the pulse generating controller in case of pulse train command operation. . • If the velocity exceeds the setting of parameter VL(Velocity limiter) because of external force, remove the effect of external force. • Refer to "5. Tuning" if the velocity exceeds the setting of parameter VL(Velocity limiter) due to poor tuning. • If there is a possibility of motor oscillation due to insufficient adjustment, perform gain adjustment to suppress vibration.

(1) The input ACLR (Alarm clear) or the command CL (Clear alarm) clears the warning.

11.3.10. Alarm C3: CPU Error

- The CPU integrated into the Driver Unit controls carious types of operation.
  This alarm reports that the CPU is not properly functioning.

Table 11-17: Cause and remedy for CPU error alarm

Cause		Remedy
(1)	The CPU is not functioning because of noise.	• Reboot the power • Take measures against noise.
(2)	Defective Driver Unit	• When it does not recover by the reset of power, the Driver Unit may be defective. Replace it referring to "Appendix 5: Procedure for Replacing Driver Unit Model EDD," if necessary.

11.3.11. Alarm E0: RAM Error

- The RAM temporally stores the setting of parameters, programs and the important data for the Driver Unit.
  This alarm occurs when the data on the RAM goes to heaven from any reason.

Table 11-18: Cause and Remedy for the alarm E0

Cause		Remedy
(1)	The data on the RAM is rewritten because of noise or other reason.	• Reset the power. • Take measures against noise.
(2)	Defective Driver Unit	If resetting the power does not work, the Driver Unit may be defective. Replace it referring to "Appendix 5: Procedure for Replacing Driver Unit Model EDD".

(1) The EEPROM will not back up the inputted settings during this alarm is occurring. (This is to protect the data on the EEPROM from damage because of the broken data on the RAM.)

(2) You may monitor parameters and programs during the occurrence of the alarm. However the readout may include damaged data.

11.3.12. Alarm E2: ROM Error

- The Driver Unit has the EEPROM to back up the settings of parameters and programs. The limits for number of times for overwriting and deleting data is approximately 100 000.
  (The EEPROM does not require a battery for data backup.)
  This alarm occurs when the data is not properly stored on the EEPROM due to its service life, or the data is not properly overwritten to the EEPROM.

Table 11-19: Cause and remedy for the alarm E2

Cause		Remedy
(1)	ROM data have been altered by noise or other cause.	• Take measures against noise. • Initialize the memory by the command SI (Set initial parameters), and then turn on the power again. If the alarm does not occur, restore the previous parameter settings.
(2)	EEPROM is down because of the life limit	• If the alarm occurs immediately after the power is reset following initialization of the ROM, it is very likely that the EEPROM is the cause. • Replace the Driver Unit referring to "Appendix 5: Procedure for Replacing Driver Unit Model EDD".

(1) We recommend setting the command WM1 to prohibit overwriting to the EEPROM for the application where the master controller frequently changes internal parameters. However, be sure to execute the command WD (Write Data) before turn off the power if revised parameter settings must be stored. (Do not turn the power off during execution of the command WD because it takes approximately 30 seconds.)

(2) Execution of the command SI (Set initial parameters) during occurrence of the alarm will initialize all settings on the damaged data area.

◊ Besides parameters, some programs and the settings of control inputs and outputs may be initialized. In such a case, restore the programs and the settings of control inputs and outputs.

11.3.13. Alarm E7: System Error

- The Driver Unit holds the related data and settings to the Motor type with which it is combined. (Factory set parameters)
  This alarm occurs when the data on the Motor is altered or damaged from any cause.

Table 11-20: Cause and remedy for the alarm E7

Cause	Remedy
(1) Defective program memory on the PCB or defective EEPROM	• Check the following and inform us the results through NSK sales or representative. (1) The reference number of the mated Motor. (2) Echoed back character strings when "?XSY [ENT]" is inputted. [Example] XSYS1006 • Replace the Driver Unit referring to "Appendix 5: Procedure for Replacing Driver Unit Model EDD," if necessary.

(1) Never execute the command SI during occurrence of this alarm. It is dangerous because the factory set parameters for the wrong Motor type may be set.

11.3.14. Alarm E8: Interface Error

- The Driver Unit incorporates several printed circuit boards inside.
  This alarm occurs when an error is detected on the printed circuits board for control.

Table 11-21: Cause and remedy for the alarm E8

Cause	Remedy
(1) Defective FPGA on PCB	• If a reset of the power does not solve the problem, the Driver Unit may be defective. Replace it referring to "Appendix 5: Procedure for Replacing Driver Unit Model EDD," if necessary.

11.3.15. Alarm E9: ADC Error

- The Driver Unit checks the current detecting circuit when activating the Motor servo.
  This alarm reports that an error is on the A/D converter, a component of the current detecting circuit.

Table 11-22: Cause and Remedy for the alarm E9

Cause	Remedy
(1) The circuits for the main power supply and current detection may be damaged by serge current due to lightning.	• If a reset of the power does not solve the problem, the Driver Unit may be defective. Replace it referring to "Appendix 5: Procedure for Replacing Driver Unit Model EDD," if necessary.

11.3.16. Warning F1: Excess Position Error

- The position error means the difference between the position command to the Motor and the current Motor position. (You can monitor the position error by the monitor TE/RP (Tell position error counter). This warning occurs when the absolute value of position error is greater or equal to the threshold of parameter CO (Position error counter over limit).

Table 11-23: Cause and remedy for the warning F1

Cause		Remedy
(1)	The motor does not respond to the motion command.	• Confirm the combination of the Motor and the Driver Unit.
(2)	Excessive load	• Check for mechanical restraint that causes high friction resistance or lock of the Motor. • Reduce settings of parameters fro acceleration and deceleration. parameters. (In case of pulse train command operation, reduce the parameter settings of acceleration and deceleration to the pulse generating controller.)
(3)	Interference of mechanical clump	
(4)	Excessive acceleration and deceleration	
(5)	The setting of CO data is too low.	• Firstly, check if the shipping set of CO200000 is maintained. (The parameter CO isn't necessarily to be 200000. It is rather set to the specifications of machine into which the Megatorque Motor System is to be incorporated.)
(6)	Poor tuning of servo parameters.	• Tune the servo parameters referring to "5. Tuning",
(7)	The Motor is out of control.	• Confirm the combination of the Motor and the Driver Unit.
(8)	Defective cable, Motor, or Driver Unit.	• Follow "Appendix 2: How to Check Motor Condition." Replace the cable and/or the Motor if necessary. • If above procedure does not work, the Driver Unit may be defective. Replace it referring to "Appendix 5: Procedure for Replacing Driver Unit Model EDD".

(1) The input ACLR (alarm clear) or the command CL (Clear alarm) will clear the warning.

11.3.17. Over Travel F2: Software Over Travel Limit

- The following are two types of setting of the off limits area to the Motor.
  - ◊ Software over travel limit: The parameter sets the position data for the off limits area. . (Refer to "6.2.4. Software Over Travel Limit" for setting the off limits area.
  - ◊ Hardware over travel limit: Output signal from the limit sensors to the Driver unit sets the off limits area.
- This warning reports that the Motor enters or passes through the off limits area set by the software travel limits.

Table 11-24: Cause and remedy for the software over travel limit

Cause		Remedy
(1)	The Motor enters the off-limits are set by the parameters OTP and OTM.	• Move the Motor out of the off limits area.

(1) F2 alarm is produced when the over travel is occurred.
The software over travel is detected based on the positioning command, rather than the current Motor position. Positioning command is equal to the sum of current position and position error.
Therefore, if the positioning command is not within the range of software over travel detection, the F2 alarm is not produced even the actual motor position is entered within the detection range due to the overshooting.

- ◊ When you need to detect the over limit using current Motor position, the hardware over travel limit detection is needed.
  It is essential to place the external limit sensor.
- ◊ The hardware over travel limit detection will occur even the Motor servo=off state. The detected position is actual Motor position.

(2) The software over travel limits OTPA and OTMA outputs the direction from which side the Motor gets in the limit area.

Table 11-25: Relation between the output OTPA and OTMA

Direction of intrusion on the area	State of the outputs OTPA and OTMA
From OTP side	Output OTPA opens
From OTM side	Output OTMA opens

11.3.18. Over Travel F3: hardware Over Travel Limit

- The followings are two types of setting of the off limits area to the Motor.
  - ◊ Software over travel limit: The parameter sets the position data for the off limits area. (Refer to "6.2.4. Software Over Travel Limit" for setting the off limits area.)
  - ◊ Hardware over travel limit: Input signal from the limit sensors to the Driver Unit sets the off limits area.
- This warning reports that the Motor enters or passes through the off limits area set by the software travel limits.

Table 11-26: Cause and Remedy for the over travel F3

Cause		Remedy
(1)	Wrong polarity setting of OTP or OTM input port.	• The shipping set of polarity of inputs OTP and OTM is normally closed (Connector B).The warning occurs if the port is not connected.
(2)	OTP or OTM is inputted.	• Input a command to move the Motor out of the off limits area as the System accepts the move command to this direction. • Turn off the Motor servo then move the Motor manually out of the area.
(3)	Wrong wiring (OTP ↔ OTM, etc.)	• Check wiring of OTP and OTM. • Check the OT sensor.
(4)	Defective limit sensor (Limit sensor that is connected to OTPA or OTMA sensors.)	

(1) When the limit sensor is activated, the state of over travel limit warning is purposely hold until one of the following actions is taken. (Instantaneous over travel state holding function)

- ◊ Move the Motor opposite direction to the entered side
- ◊ Turn the Motor servo off and manually rotate the Motor opposite to the entered side.

(2) If the Motor gets in the software over travel limit area, the output of OTPA or OTMA will report from which side the Motor entered into the area.
The plus or minus direction of the scale depends on the setting of parameter DI.

Table 11-27: Relation between OTPA and OTMA

Direction of intrusion on the area	Condition of Output OTPA and OTMA	
	DI0 (Shipping set)	DI1
From OTP side	Output OTPA opens	Output OTMA opens
From OTM side	Output OTMA opens	Output OTPA opens

11.3.19. Alarm F4: Emergency Stop

- This alarm does not report a problem of the Motor System. This alarm is the input signal for emergency stop to the Driver Unit from the user device side.
  - ◊ During the state of emergency stop, the Motor servo is off and the dynamic brake functions to stop the Motor motion.
  - ◊ Deactivation of the emergency stop input clears this alarm.

Table 11-28: Cause and remedy for the alarm F4

Cause		Remedy
(1)	Wrong setting of the input EMST signal port polarity.	• The shipping set of the input EMST port is normally closed contact. If the port is not connected the alarm occurs. Refer to "3.4.3. Polarity Setting of Control Input Port (Normally Open Contact and Normally Closed Contact)".
(2)	EMST signal is inputted.	• Take measures against the problem, and then clear the EMST input.
(3)	Defective wiring	• Check wiring between the input EMST to the Emergency .Stop switch. • Check the Emergency Stop switch itself.
(4)	Defective EMST switch	

11.3.20. Warning F5: Program Error

- The program positioning operation is one of the positioning operations available for the Driver unit Model EDD.
  This warning occurs when the start and execution of the program specified by the user are not properly performed.
  - ◊ The command TA/HI identifies the cause.

Table 11-29: Cause and remedy for the warning F5

Alarm history	Cause	Remedy
F5 – 0	The System is executing other program.	• The input RUN (Program start) is disabled while the output BUSY (In-operation) is closed. • When a mechanical contact is used for the input RUN, check for chattering that may cause two or more rising signals. • Check if the input RUN is already ON due to noise. • If the warning occurs due to causes above, increase the setting of the parameter NW (Anti-chattering timer) of the port which is assigned to the input RUN (Shipping set: PI5) referring to "8.1.3.1. Editing Control Input Function".
F5 – 1	There is no command is set in the specified channel.	• Confirm if the selection of the program channel is right. • Check if one of the input PRG0 to PRG7 is settled 1 [ms] before an input of the RUN signal.
F5 – 2	A command that cannot be carried out in the current condition is involved in the channel program.	• For example, the Motor servo must be activated in case of a positioning command to accept the input RUN. • Refer to "9.3. Glossary of Command and Parameter" for conditions to execute each command.
	A data that is out of specification is set in the channel program.	• For example, the warning F5 occurs if the positioning command AQ6 is set to the program even the parameter QR (Dividing number, user scale) is set to QR4 in a positioning operation with user unit.
F5 – 3	The input STP is ON, or an alarm or a warning that prohibits execution of the channel program.	• Confirm if the Input STP (Stop) is OFF. • Confirm if an alarm or a warning is occurring.

(1) The input ACLR (Alarm clear) or the command CL (Clear alarm) clears the warning.

11.3.21. Warning F8: Automatic Tuning Error

- The command AT (Automatic tuning) automatically estimates the load moment of inertia.
  The warning F8 occurs when the automatic tuning could not complete estimation of the load moment of inertia.

  ◊ Indication on the terminal identifies the cause.

Table 11-30: Cause and remedy for the warning F8

Indication of terminal	Cause	Remedy
POSITION OVER?	The Motor rotated more than 30° during automatic tuning.	• Remove external interference. • Mount the Motor so that the Moro axis is vertical. (Eliminate the effect of gravity.) • Tune the servo gains referring to "5.3. Tuning Level 2: servo Gain Tuning" instead of automatic tuning.
OVER INERTIA WRN.?	The load moment of inertia is too much.	• Remove the cause of excessive friction resistance or mechanical interference that locks the Motor. • Reduce the load moment of inertia. Refer to "Table 3-4: Recommended load moment of inertia of Megatorque Motor"
CAN'T TUNE?	Cannot perform automatic tuning	• Remove the cause of external interference. • Mount the Motor so that the Moro axis is vertical. (Eliminate the effect of gravity.) • Increase rigidity of the load. • Tune the servo gains referring to "5.3. Tuning Level 2: servo Gain Tuning" instead of automatic tuning.
ALARM DETECTED?	An alarm or a warning is occurring.	• Take measures against the cause of the alarm or the warning.
CANCELED?	The input STP (Stop) is activated, or the BS key of the terminal is pressed.	• Confirm if the input STP is active or the BS key is pressed.

(1) The input ACLR (Alarm clear) or the command CL (Clear alarm) clears the warning.

11.3.22. Warning P0: Over Heat

- The warning P0 occurs when temperature of the heat sink of the Driver Unit or the external regeneration resistor has exceeded the threshold.

  ◊ This warning occurs when the continual current flow to the external regeneration resistor elapsed over a period of 1 second due to excessive regeneration energy. (P0-1)

Table 11-31: Cause and remedy for the warning P0

Alarm history	Cause	Remedy
P0-2	Terminals SE+ and SE– of the connector CN4 (Motor connector) remain open even the external regeneration resistor is not in use.	• Short the terminal SE+ and SE– of the connector CN4 if the external regeneration resistor is not used.
P0-0	Ambient temperature of the Driver Unit has exceeded 50[[°C]].	• Confirm if the ambient temperature is less than 50[[°C]]. • Review the environment the Driver unit is installed.
P0-0	The power amplifier board has applied the current to the Motor for long enough to overheat its heat sink exceeding 90[[°C]].	• Check if excessive friction force is applied due to interference with the surrounding mechanism or the Motor is locked. • Reduce the load moment of inertia. • Review the rate of operating time and idle time. (Increase idle time.) • Reduce the parameter settings of acceleration and deceleration. In case of the pulse train command positioning, reduce those of the master controller. • Lower the Motor velocity.
P0-0 P0-1	Excessive load	
P0-0	Excessive duty cycle of operation	
P0-0	Caused vibration due to poor tuning of servo parameters.	• Refer to "5. Tuning".
P0-0 P0-1 P0-2	Defective Cable, Motor or Driver Unit	• Check the Motor condition referring to "Appendix 2: How to Check Motor Condition". Replace the cable or the Motor if necessary. • If above measures do not work, the Driver Unit may be defective. Replace it referring to "Appendix 5: Procedure for Replacing Driver Unit Model EDD".

(1) If the thermo sensor remains ON, the warning occurs again when the power is turned on.

11.3.23. Alarm P1: Main Power Overvoltage

- The Driver Unit checks the voltage in the power amplifier and gives an alarm when it exceeds the specified value.

  ◊ Following are the cause of the increase in the voltage of power amplifier: the riding main power voltage supplied externally and the rising voltage caused by the regeneration energy

Table 11-32: Cause and remedy for the alarm P1

	Cause	Remedy
(1)	Commutation voltage of the main power has exceeded + 390 [V] (correspond to input 275 [VAC] volts) due to the higher voltage than the specification is applied.	• Immediately shut down the main power. • Confirm the main power voltage and turn on the power again.
(2)	High moment of inertia of the load is decelerated with extremely high deceleration and resulted in the same situation above.	• Immediately shut off the main power. • Reduce the moment of inertia. • Reduce the settings of acceleration and deceleration. • Review the use of an external regeneration resistor. Refer to "Appendix 6: Regeneration Resistor."
(3)	Defective Cable, Motor or Driver Unit.	• Check the Motor and the Cable referring to "Appendix 2: how to Check Motor Condition" and replace them if necessary. • If the above measures do not work, the Driver Unit may be defective. Replace it referring to "Appendix 5: Procedure for Replacing Driver Unit Model EDD".

11.3.24. Alarm P2: Motor Over Current

- The Driver Unit watches the current that flows through the Motor.
  The Driver Unit gives this alarm when the current to the Motor exceeds the capacity.

Table 11-33: Cause and remedy for the alarm P2

Cause	Remedy
(1) Wrong combination of the Motor and the Driver Unit	• Confirm if the combination of the Motor and the Driver Unit is right.
(2) Poor insulation of the Motor cable	• Visually check for the damage on the cable cover. • Check the Motor and the Cable referring to "Appendix 2: How to Check Motor Condition" and replace them if necessary.
(3) Poor insulation of the Motor	
(4) Defective Driver Unit	• If the above measures do not work, the Driver Unit may be defective. Replace it referring to "Appendix 5: Procedure for Replacing Driver Unit Model EDD".

11.3.25. Alarm P3: Control Power Under Voltage

- The Driver Unit watches the voltage of control power supply. It gives the alarm when the voltage falls below the threshold.

Table 11-34: Cause and remedy for the alarm P3

Cause	Remedy
(1) The voltage of control power supply falls below 60 [VAC].	• Turn off the power supply. Fasten the screws for the power cable connectors and the power supply terminals. • Confirm the voltage of control power supply.
(2) Defective Driver Unit	• If above measures do not work, the Driver unit may be defective. Replace it referring to "Appendix 5: Procedure for Replacing Driver Unit Model EDD".

(1) The EEPROM does not back up an input of the parameter setting while this alarm is being on. This is because the voltage to control the CPU and the EEPROM, which are incorporated into the Driver Unit, is below the specification.

(2) If an error occurs due to a breaking of resolver wire, this alarm may be saved as an alarm history when the power is shut off.
Check the resolver cable's quality and make sure that it is properly connected.

11.3.26. Warning P5: Main Power Under Voltage

- The main power voltage must be in the specification to activate the Motor servo. The Driver Unit gives this warning when the main power voltage is too low to activate the Motor servo.

Table 11-35: Cause and remedy for the warning P5

	Cause	Remedy
(1)	Commutation voltage falls below + 60 [V] (correspond to the input voltage of 40 [VAC]) because the main power supply voltage is lower than the specification.	• Confirm the voltage of main power supply and turn on the power again.
(2)	The input SVON is inputted before the main power is turned on	• Wait for 0.5 [s] or more after the main power is turned on and turn on the input SVON.
(3)	Simultaneously input the input SVON and the main power supply.	
(4)	Defective Cable, Motor or Driver Unit	• Check the Motor and the Cable referring to "Appendix 2: how to Check Motor Condition" and replace them if necessary. • If the above measures do not work, the Driver Unit may be defective. Replace it referring to "Appendix 5: Procedure for Replacing Driver Unit Model EDD".

(1) The input ACLR (Alarm clear) or the command CL (Clear alarm) after the cause of the warning is removed.

11.3.27. Alarm P9: Power Module Alarm

- The Driver Unit has the power module to flow the current through the Motor. The Driver Unit gives the alarm when the power module generates heat abnormally or supplies excessive current to the Motor.

Table 11-36: Cause and Remedy for the alarm P9

	Cause	Remedy
(1)	The power module on the power amplifier is overheated.	• Review the rate of operating time and the idle time (Increase the idle time) • Decrease the moment of inertia. • Reduce acceleration and deceleration. • Review the environment for installing Driver Unit
(2)	Defective insulation of the Motor cable	• Visually check the Motor cable for damage on the cable cover • Check the Motor and the Cable referring to "Appendix 2: how to Check Motor Condition" and replace them if necessary.
(3)	Defective insulation of the Motor winding	
(4)	Defective control power supply on the power amplifier	• If the above measures do not work, the Driver Unit may be defective. Replace it referring to "Appendix 5: Procedure for Replacing Driver Unit Model EDD".

(1) Cool off the Driver Unit by air cooling when this alarm occurs.

(Blank Page)

12. Troubleshooting

12.1. Identifying Problem

- If problems have been occurred, check the items shown in "Table 12-1: Items to be checked when a problem occurs." When reporting problems to the NSK sales or representative, the explanation of the items in "Table 12-1: Items to be checked when a problem occurs" will help us to identify them.

Table 12-1: Items to be checked when a problem occurs

Items		Point to be checked
1)	Check the combination of the Motor and the Driver Unit	• Check if the following items on the nameplates of the Motor and the Driver Unit conform to each other: the Motor series code, the Motor size number, and the Maximum torque code. Refer to "3.1.2. Motor and Driver Unit Model EDD Combinations" for details.
2)	Power source voltage	• Check the voltage variation of the power source.
3)	Trouble recurrence	• Confirm the frequency of occurrence. [Example]: Once/ every one hour Several times/week
4)	Occurrence in special occasion	• At what particular occasion does the problem occur? [Example] • When welding process is performed in the proximity. • When the Motor is accelerating. • Occurs at the same position.
5)	State of warning and alarm	• The state of alarm of warning can be checked with the command TA (TA/HI: Tell alarm). (Refer to "11.1. Identifying Alarm and Warning".)

12.2. Troubleshooting

- Refer to a relevant chapters listed below for details.

Table 12-2: Failure State

Item	Reference
Warning and Alarm	"11. Alarm and Warning"
Power trouble	"12.2.1. Power Trouble"
Motor trouble	"12.2.2. Motor Trouble"
Vibration, Abnormal noise, and unstable motion	"12.2.3. Vibration, Abnormal Noise or Unstable Settling"
Improper positioning	"12.2.4. Improper Positioning"
Communication error	"12.2.5. RS-232C Communication Problem"

12.2.1. Power Trouble

Table 12-3: Troubleshooting for power problem

	Cause	Remedy
1)	No control power supplied.	• Check the control power voltage at the connector of the Driver Unit.
2)	CPU is not functioning. • The power is on but the CPU is not functioning.	• Refer to "CPU Error" in "11.3. Causes and Remedy."
3)	Defective Driver Unit.	• If no failure is found in the above checks, the Driver Unit may be defective. Replace it referring to "Appendix 5: Procedure for Replacing Driver Unit Model EDD."

12.2.2. Motor Trouble

Table 12-4: Troubleshooting for Motor trouble

	Cause	Remedy
1)	Wrong combination of Motor and Driver Unit.	• Check if the combination of the Motor and the Driver Unit is correct.
2)	Alarm or warning is occurring.	• Identify a warning or an alarm.
3)	Overload or mechanical interference with other part.	• The Motor is locked by a part of surrounding mechanism. • Check for mechanical interference with other part of mechanism.
4)	Positioning is not completed. • (As the sequence of the total System) The System recognizes that the previous positioning command is not executed. • (In case of a program operation) executing sequence does not complete the previous positioning command.) 4-1) Overload or interference with the equipment into which the Motor is installed. • The Motor is not locked, but an excessive friction load is applied to the Motor due to the mechanical interference with the surrounding mechanism. 4-2) Poor tuning of servo gains 4-3) In the middle of processing a positioning command. • Executing a positioning command • Executing a program operation caused by the parameter OE2.	• Confirm if the output BUSY is closed or monitor the state of Input and output by the monitor IO0/RP. • If the BUSY signal is closed, the System is executing a positioning command. • 4-1): Check the mechanical interference with the surrounding mechanism. • 4-2): Refer to "5. Tuning" for adequate tuning. • 4-3): • Wait for completion of the positioning command. • Terminate the positioning command (such as the command JOG). • Input the STP (Stop) command to interrupt the positioning operation.
5)	No torque output because the parameter TL is set to zero (TL0).	• Check if the parameter TL100 is specified by the ?TL command. If not, the setting may be altered for some reason. (Normally it should be TL100.) • Enter TL100 for 100% output torque. (Requires an entry of the password.
6)	Motor servo is deactivated by the command MO (Servo off).	• Enter the command SV to activate the Motor servo.
7)	The objective program channel is not selected in a program operation.	• Use the command IO0 to confirm if the objective channel is selected.
8)	Defective Cable, Motor and/or Driver Unit.	• Refer to "Appendix 2: How to Check Motor Condition." Replace the cable of the Motor if necessary. • If no failure is found in the Cable and the Motor, the Driver Unit may be defective. Replace it referring to "Appendix 5: Procedure for Replacing Driver Unit Model EDD."

12.2.3. Vibration, Abnormal Noise or Unstable Settling

Table 12-5: Troubleshooting for vibration, abnormal noise and unstable settling

Cause		Remedy
1)	Wrong combination of Motor and Drive Unit.	• Check if the combination of the Motor and the Driver Unit is correct.
2)	Loose mounting of the fixture and/or the Motor	• Check for loose mounting of the fixture and the Motor.
3)	Poor setting of the servo gains	• Refer to "5. Tuning" for adequate tuning.
4)	Mechanical resonance.	
5)	Low rigidity of the total mechanical system.	• Refer to "5. Tuning" for adequate tuning. • If the problem remains, review the rigidity of the total mechanism.
6)	Overload or interference with the mechanical system of the equipment.	• Remove the external interference.
7)	Defective Cable, Motor, and/or Driver Unit.	• Refer to "Appendix 2: How to Check Motor Condition" and check the cable and the Motor. • If no failure is found in the Cable and the Motor, the Driver Unit may be defective. Replace it referring to "Appendix 5: Procedure for Replacing Driver Unit Model EDD."

12.2.4. Improper Positioning

Table 12-6: Troubleshooting for improper positioning

Cause		Remedy
1)	Wrong combination of Motor and Driver Unit.	• Check if the combination of the Motor and the Driver Unit is correct.
2)	An alarm or a warning is occurring.	• Identify the alarm or the warning.
3)	Loose mounting of the fixture and/or the Motor.	• Check for loose mounting of the fixture and the Motor.
4)	Poor setting of the servo gains. .	• The positioning accuracy is poor even the IPOS signal is closed. • Review the tuning state of the servo related gains.
5)	Overload and/or an excessive friction load to the Motor due to the mechanical interference with the surrounding mechanism.	• Remove the external interference.
6)	External noise interferes in the pulse train command signal.	• Take measures against the external noise.
7)	An objective program channel is not selected in the program operation	• Use the monitor IO0 (Input/output monitor 0) to confirm if the objective channel is selected.
8)	Defective Cable, Motor and/or Driver Unit.	• Refer to "Appendix 2: How to Check Motor Condition" and check the cable and the Motor. Replace them if necessary. • If no failure is found in the Cable and the Motor, the Driver Unit may be defective. Replace it referring to "Appendix 5: Procedure for Replacing Driver Unit Model EDD."

12.2.5. RS-232C Communication Problem

Table 12-7: Troubleshooting for RS-232C communication problem

	Cause	Remedy
1)	Defective wiring of communication cable	• Check the wiring referring to "Appendix 7: Wiring of RS-232C Communication Cable". • Be sure to short the signals RTS and CTS of the Driver Unit even the signals RTS and CTS are not in use.
2)	When a message "Communication Error" appears on the display of the NSK Handy Terminal FHT-31. (The Handy Terminal displays the message by itself.) • This message assumes that the break of the RS-232C communication cable.) • In the normal state, the RTS signal of the Driver Unit (CTS of the Handy Terminal side) is ON. This message appears when the RTS signal is being off for 2 seconds or longer.	• Try another NSK Handy Terminal M-FHT31.
3)	When a message "Communication Error" appears on the display of the NSK Handy Terminal FHT-31. (The Handy Terminal displays the message by itself.) • This message assumes the difference in the board rate. • This message appears on the display if the data length is longer than specified or the stop bit is not 2-bit.	• Check if the baud rate of the Handy Terminal is 9 600 [bps]. (Refer to the instruction manual of the Handy Terminal. • Use another M-FHT31.
4)	When _ (under bar)appears on the display: • 4-1) The Handy Terminal was connected while the power of the Driver Unit is turned on. • 4-2) Break of signal cable. • 4-3) Failure of the Driver Unit.	• 4-1) The RS-232C cable must be connected when the power of the Driver Unit is off. Be sure to follow the above procedure to protect the RS-232C device of the controller device. • 4-2) Confirm the conductivity of the RS-232C cable. • 4-3) If no failure is found in the cable and the Motor, the Driver Unit may be defective. • Replace it referring to "Appendix 5: Procedure for Replacing Driver Unit Model EDD."
5)	When no character appears on the screen; • 5-1) Break of signal cable • 5-2) Defective Driver Unit.	• 5-1) Confirm the conductivity of the RS-232C cable. • 5-2) The Driver Unit may be defective. Replace it referring to "Appendix 5: Procedure for Replacing Driver Unit Model EDD."

Appendix 1: How to Monitor Input and Output Signal

- The command IO monitors the state of Input and Output signals of CN2 connector.
- This function is useful for checking the wirings.

Monitor for electric status: Monitor IO0

- This monitor reports the electrical condition of the input and output ports.
  - ◊ Input as "IO0/RP".
    Input the [BS] key to terminate repetitive readout.

Fig A-1: Example of the monitor IO0

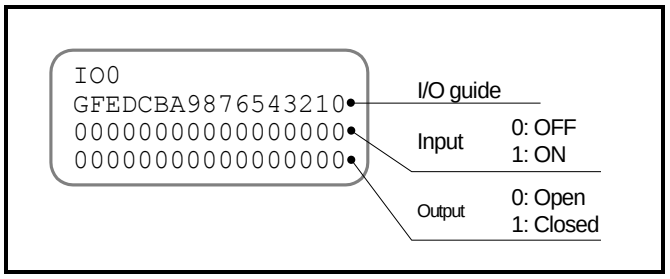

Table A-1: Monitoring contents of the monitors IO0 and IO1

Gide	G	F	E	D	C	B	A	9	8	7	6	5	4	3	2	1	0
CN2 pin number	20	19	18	17	16	15	14	13	12	11	9	8	7	6	5	4	3
Pin code (Shipping set)	**PI16 (DIR)**	**PI15 (JOG)**	**PI14 (PRG7)**	**PI13 (PRG6)**	**PI12 (PRG5)**	**PI11 (PRG4)**	**PI10 (PRG3)**	**PI09 (PRG2)**	**PI08 (PRG1)**	**PI07 (PRG0)**	**PI06 (STP)**	**PI05 (RUN)**	**PI04 (SVON)**	**PI03 (OTM)**	**PI02 (OTP)**	**PI01 (ACLR)**	**PI00 (EMST)**
CN2 pin number	–	–	–	–	–	–	–	–	–	35	34	33	32	31	30	29	28
Pin code (Shipping set)	Reserved	Reserved	Reserved	Reserved	Reserved	Reserved	Reserved	Reserved	Reserved	**PO07 (NEARA)**	**PO06 (IPOS)**	**PO05 (BUSY)**	**PO04 (SVST)**	**PO03 (OTMA)**	**PO02 (OTPA)**	**PO01 (WRN)**	**PO00 (DRDY)**

Monitor for Internal Recognition of Input and Output State: Monitor IO1

- Monitors the applied state of following function to the control inputs and outputs: the polarity reverse and the anti-chattering timer to the control inputs, and the stability timer for the control outputs.
  - ◊ For the inputs, the monitor reports how the Driver Unit recognizes the application state of functions.
    (The readout is the applied state of parameters AB [Input polarity] and NW [Anti-chattering timer] in the command PI [Edit input port])
  - ◊ For the outputs, the monitor reports the state just before the application of output logic.
    (The readout is the applied state of the parameters ST (Stability timer) in the command PO (Edit control output). The parameter GC (Output logic) is not applied.)

Fig A-2: Example of Monitor IO1

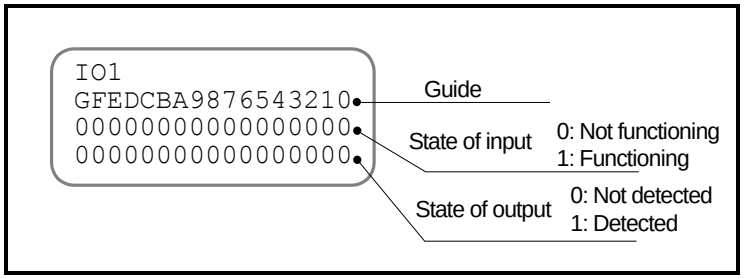

- The readout of the state of the input signals by the monitor IO1 will be affected by the parameter AB (Input polarity).
  - ◊ For example, the shipping set of the input EMST (Emergency stop) is a normally closed contact. As shown in Figure A-3 below, the function of emergency stop is effective even the input signal is OFF at the moment of (1). At the moment of (2), the function of emergency stop is invalid when the input signal is ON.

Fig A-3: Port polarity and ON/OFF of the input EMST

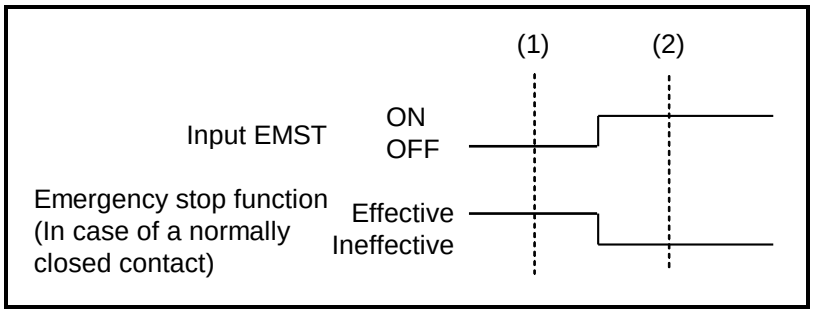

- ◊ The "Table A-2: Read out of the monitors IO0 and IO1 when the input EMST is a normally closed contact" below shows the comparison of the readouts of the monitor IO0 and IO1 at the moment of (1) and (2) in "Fig A-3: Port polarity and ON/OFF of the input EMST" above.

Table A-2: Read out of the monitors IO0 and IO1 when the input EMST is a normally closed contact

Moment	Monitor IO	Readout
		G F E DC B A 9 8 7 6 5 4 3 2 1 0
(1)	IO0	∗∗∗∗∗∗∗∗∗∗∗∗∗∗∗0
	IO1	∗∗∗∗∗∗∗∗∗∗∗∗∗∗∗1
(2)	IO0	∗∗∗∗∗∗∗∗∗∗∗∗∗∗∗1
	IO1	∗∗∗∗∗∗∗∗∗∗∗∗∗∗∗0

Monitor for State of Input Functions: Monitor IO2

- Monitors the application state of input functions in a line.
  The readout is the recognition of the Driver Unit.
  - ◊ The readout is the application state of the parameters AB (Input polarity) and NW (Anti-chattering timer) in the command PI (Edit control input).
- The number 1 denotes that the function is available and the number 2 denotes that the function is not available.

Table A-3: Readout of Monitor IO2

Guide	F	E	D	C	B	A	9	8	7	6	5	4	3	2	1	0
Function code	JOG	PRG7	PRG6	PRG5	PRG4	PRG3	PRG2	PRG1	PRG0	STP	RUN	SVON	OTM	OTP	ACLR	EMST
	Reserved	Reserved	Reserved	Reserved	Reserved	Reserved	Reserved	Reserved	Reserved	Reserved	HLS	HOS	IOFF	ORD	HLD	DIR

Monitor for State of Output Functions: Monitor IO3

- Monitors the application state of output functions in a line.
  The readout is the application state just before the application of the output logic.
  - ◊ The monitor is not applicable for the parameters ST (Stability timer) and GC (Output logic) in the command PO (Edit control input).
- The number 1 indicates that the output will be detected and the number 0 indicates that the output will not be detected.

Table A-4: Readout pf Monitor IO3

Guide	F	E	D	C	B	A	9	8	7	6	5	4	3	2	1	0
Function code	TVEU	TVO	TVU	TEO	TEU	ZONEB	ZONEB	NEARB	NEARA	IPOS	BUSY	SVST	OTMA	OTPA	WRN	DRDY
	Reserved	Reserved	Reserved	Reserved	Reserved	Reserved	ZONEC	HCMP	HOME	NRM	OTXA	TJO	TJU	TTO	TTU	TVEO

Monitor for Individual Function

- An input of **F** + **Function name (code) of input or output** is available to monitor only the application state of the inputted function by the code.
  - ◊ For the inputs, the monitor reports how the Driver Unit recognizes the application state of functions.
  - ◊ For the outputs, the monitor reports the application state just before application of the stability and the output logic.
    That is, the readout is the state before filtering (stability timer) the output condition.

- For example, "Fig A-4: Example of function monitor" below illustrates a monitoring of the state of input SVON (Servo on). The example indicates that the number 1 is showing the input SVON is effective, supposedly the input SVON is even a normally closed contact.

Fig A-4: Example of function monitor

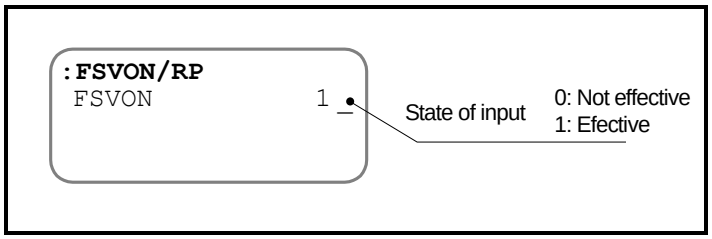

Example: Check if the input RUN (Start program) is inputted.

- Firstly, check if an input of the command is acceptable following the procedures below.

  1) Connect the Handy Terminal to the connector CN1 of the Driver Unit. Then turn on the power of the Driver Unit.

  2) Confirm that the prompt ": (colon)" is on the display. (If the prompt is not on the display, press the ENT key once.

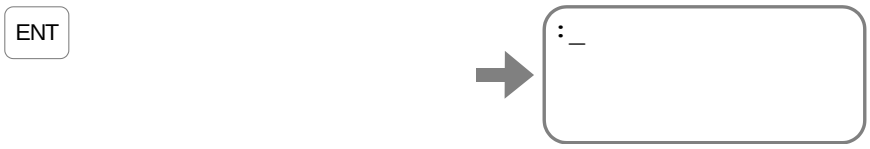

- Monitor the function state of input ports by the monitor IO2 (Input function).

  1) Repeat monitoring the IO2.

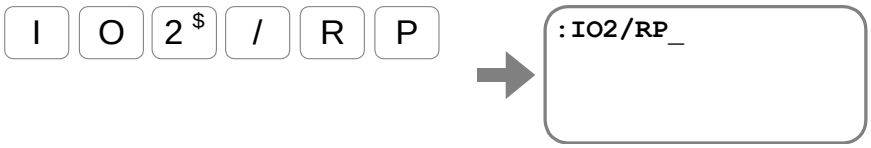

  2) Input the ENT key for monitoring.

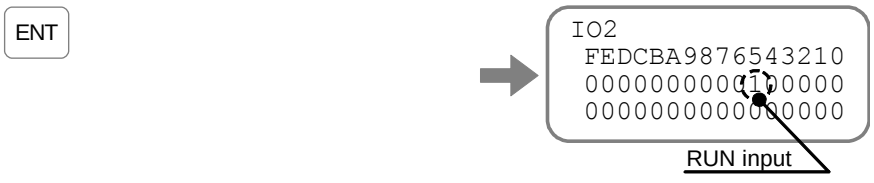

  The first line below the guide **5** represents the readout of the input RUN.

  ◊ The readout is applied the parameter AB (Input port polarity), and thus the readout will be **1** if the input RUN is effective.

  ◊ An input of the BS key interrupts monitoring and the prompt ": (colon)" appears on the display.

- The status of the input RUN can be individually monitored

Input as **F** + **Input/Output function code**.

F R U N / R
P ENT

◊ Input of the BS key will terminate repetitive monitoring and the prompt ": (colon)" appears on the display.

Appendix 2: How to Check Motor Condition

- Examine resistance and insulation resistance of Motor windings to check if the Motor is in working condition. The Motor is in normal condition if the checking procedures below are all satisfactory.
- First, check the winding resistance including the Motor cable. If the result is not satisfactory, check the Motor only.

Resistance check of Motor winding

Fig A-5: Check with the Cable set

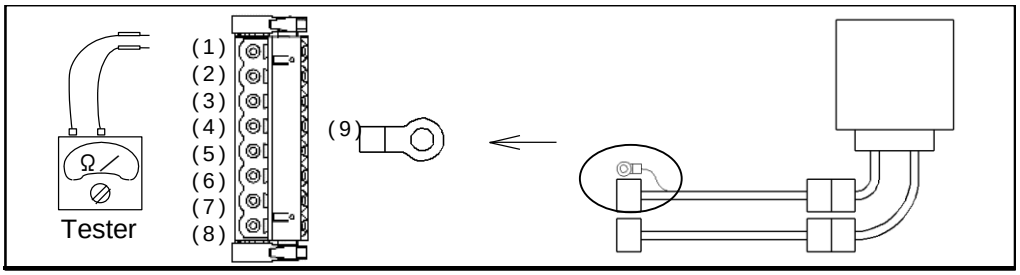

Fig A-6: Check the Motor only

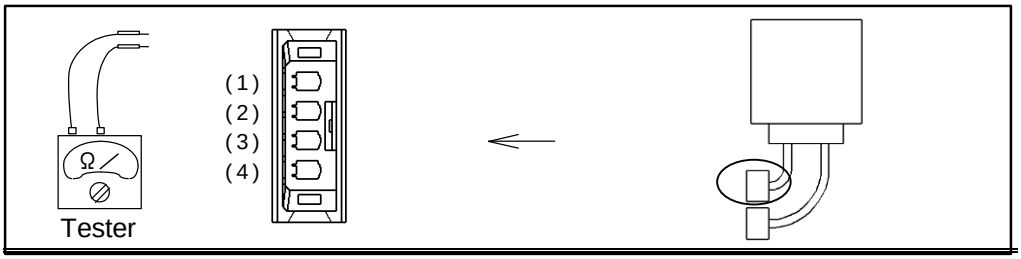

- Do not turn the rotor while checking the Motor winding.

Table A-5: Checking points

	Cable connector	Motor connector	Result
øU øV	(1) ↔ (2) (U) (V)	(1) ↔ (2) (U) (V)	
øV øW	(2) ↔ (3) (V) (W)	(2) ↔ (3) (V) (W)	
øW øU	(3) ↔ (1) (W) (U)	(3) ↔ (1) (W) (U)	

Table A-6: Specifications of resistance of Motor winding

Motor type	Winding resistance (Ω)	Specification
PS1004	70.3	1. ± 30% of error 2. Difference between each phase UV, VW, and WU is less than 15%
PS1006	24.4	
PS1012	10.6	
PS1018	5.1	
PS3015	5.8	
PS3030	4.6	
PS3060	2.4	
PS3090	3.5	
PN2012	15.0	
PN3045	1.9	
PN4135	2.6	
PN4180	3.2	
PX3050	2.2	

* Please ask NSK sales or representative for a Motor with special winding specifications and a Cable longer than 4 m.

Resistance check of the resolver cable

Fig A-7: Check with the Cable set

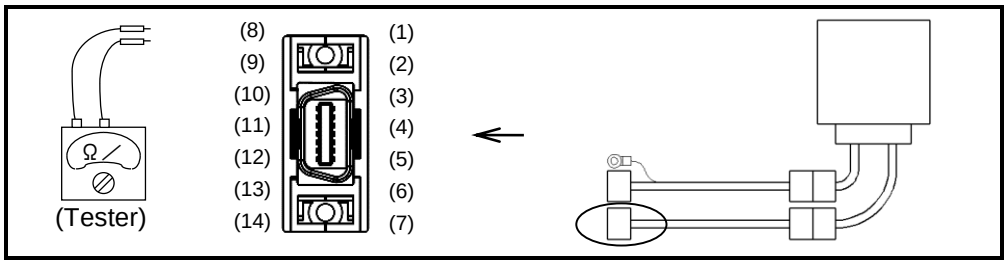

Fig A-8: Check the Motor only

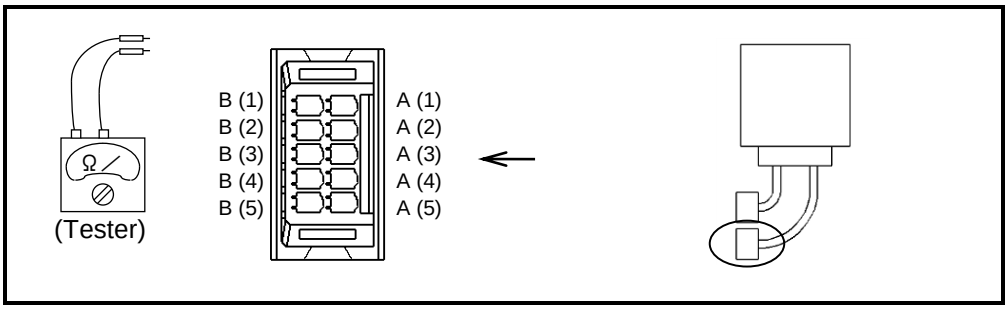

Table A-7: Checking points of a resolver with absolute position sensor and winding resistance

	Cable connector	Motor connector	Result	Specification
INC-A	(1) ↔ (9) (INC-A) (INC･COM)	A(1) ↔ A(4) (INC-A) (INC･COM)		1.Resistance • PS1 type, PX3 type: 8.3±1 [Ω] • PS 3 type, PN3 type, PN4 type: :9.9±1 [Ω] • PN2 type:7.7±2 [Ω] 2. Variation between each phase A, B and C shall be 1.0 [Ω] or less.
INC-B	(2) ↔ (9) (INC-B) (INC･COM)	A(2) ↔ A(4) (INC-B) (INC･COM)		
INC-C	(3) ↔ (9) (INC-C) (INC･COM)	A(3) ↔ A(4) (INC-C) (INC･COM)		
ABS-A	(4) ↔ (8) (ABS-A) (ABS･COM)	B(1) ↔ B(4) (ABS-A) (ABS･COM)		1.Resistance • PS1 type, PX3 type: 8.3±1 [Ω] • PS3 type, PN3 type, PN4 type: 9.9±1 [Ω] • PN2 type:7.7±2 [Ω] 2. Variation between each phase A, B and C shall be 1.0 [Ω] or less.
ABS-B	(5) ↔ (8) (ABS-B) (ABS･COM)	B(2) ↔ B(4) (ABS-B) (ABS･COM)		
ABS-C	(6) ↔ (8) (ABS-C) (ABS･COM)	B(3) ↔ B(4) (ABS-C) (ABS･COM)		

∗ Please ask NSK sales or representative for the specifications of the Motor with special winding, and the Cable longer than 4 m.

Fig A-9: Connection of the Motor with the absolute position sensor [Reference only]

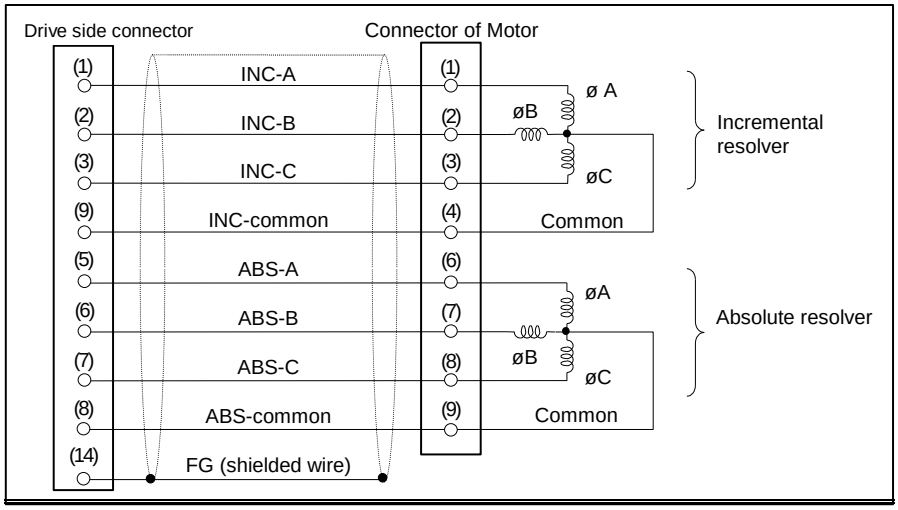

Insulation resistance check of Motor winding

⚠ *Caution: Disconnect the Motor from the Driver Unit when checking insulation resistance of the Motor.*

⚠ *Caution: Checking voltage must be 500 VDC or less.*

Fig A-10: Check with the Cable

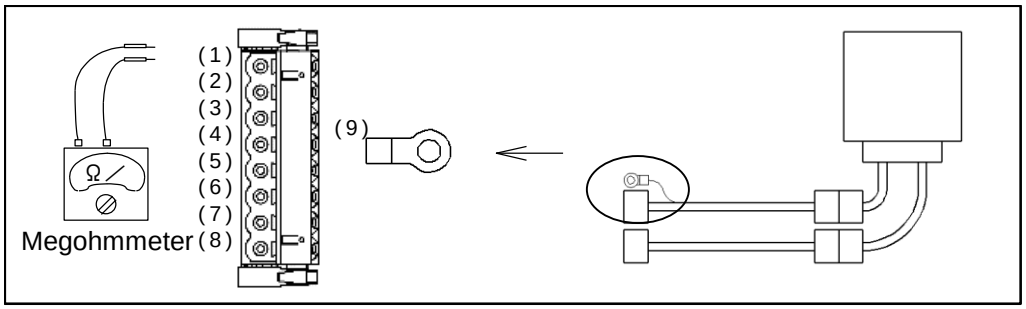

Fig A-11: Check the Motor only

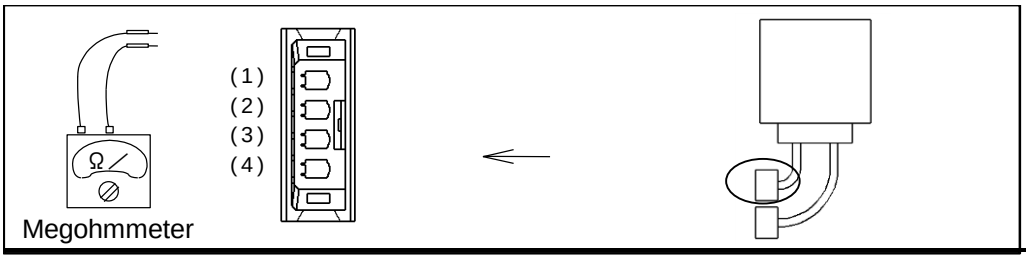

Table A-8: Checking point

	Cable connector	Motor connector	Result
øU – PE	(1) ↔ (9) (U) (PE)	(1) ↔ (4) (U) (PE)	
øV – PE	(2) ↔ (9) (V) (PE)	(2) ↔ (4) (V) (PE)	
øW – PE	(3) ↔ (9) (W) (PE)	(3) ↔ (4) (W) (PE)	

Table A-9: Specification of Insulation resistance (Common to all type of Motor)

	Specification
With cable	1 [MΩ] or over
Motor only	2 [MΩ] or over

Visual check of the Motor and the Cables

- Check the Motor for damage.
- Check the cable for damage of the cable insulation.

Appendix 3: How to Back up and Restore the Settings of Programs and Parameters

Backup and Restore is supported by using the handy terminal or EDD Megaterm. Use appropriate means in accordance with your environment.

Appendix 3-1: When Using the Handy Terminal FHT31

- The following describes how to back up the settings of parameters by the memory function of the Handy Terminal FHT31.
- The Handy Terminal FHT11 cannot be used for the backup procedures described below. Refer to "Appendix 3.2. Back up Manually".

Preparation

- Handy Terminal FHT31, FHT21

How to back up

1) The parameter AO (Absolute position scale offset), which sets the Motor home position, and the parameter MM (Multi-line monitor), which sets the monitoring mode to the Handy Terminal, won't be backed up by the following procedures.
Keep note by hand with the following procedures

(1) Monitor the setting of the parameter AO.
The setting of the parameter PO must be set to individual Motor, thus it shall be noted for each Motor.

? A O ENT

(2) Monitor the setting of the parameter MM and note it.

? M M ENT

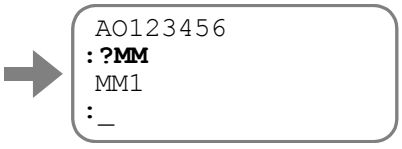

2) Back up the setting using the memory function of the Handy Terminal FHT31.

(1) While pressing the SHIFT key in the command waiting state, press the BS key for approximately 3 seconds.
The mode changes from the normal node to the user mode and the menu will be on the display.

SHIFT BS

(2) Execute uploading (back up the data to the memory of the Handy Terminal from the Driver Unit.)

Press the keys in order of [1] and [ENT] for inputting the name of backup file.

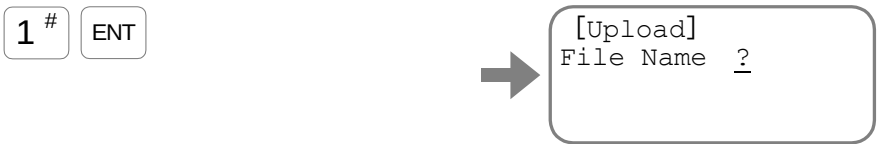

(3) For an example, name the file as "EDD01".

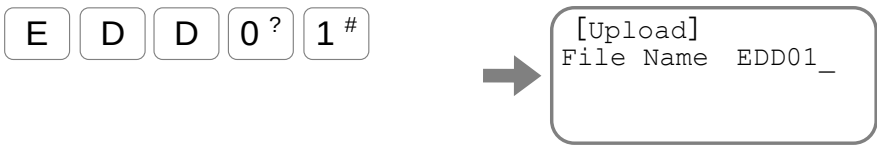

An input of the [ENT] key calls up the confirmation screen to start uploading.

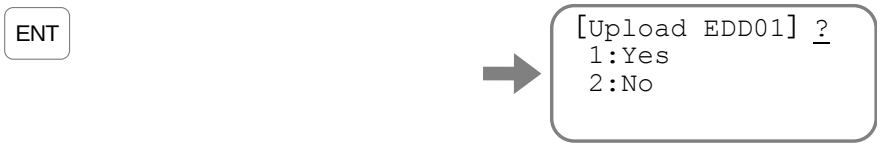

(4) Press the keys in order of [1] and [ENT] to start uploading.

The display scrolls in high speed while uploading. At the completion of uploading, the display menu changes to the editing menu in the user state.

It changes to the normal mode by a press of the [BS] while pressing the [SHIFT] key.

How to restore the parameter settings

1) Execute restoring the parameter settings using the memory function of the Handy Terminal FHT31.

(1) While pressing the [SHIFT] key in the command waiting state, press the [BS] key for approximately 3 seconds.
The mode changes from the normal node to the user mode and the menu will be on the display.

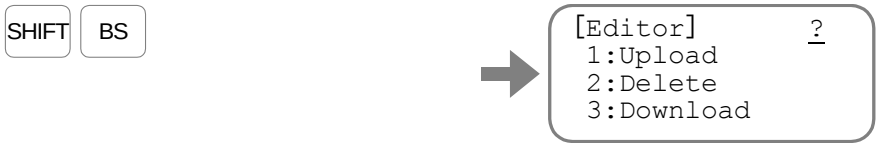

(2) Execute downloading (Transfer the setting to the memory of the Driver Unit from the Handy Terminal). Press the keys in order of [3] and [ENT] to change the display menu for inputting the file number.

3 < ENT

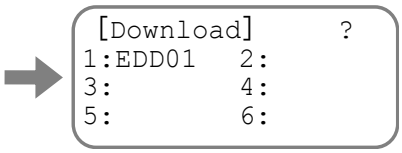

(3) Input the key [1] for the file "EDD01" for restoring.

1 #

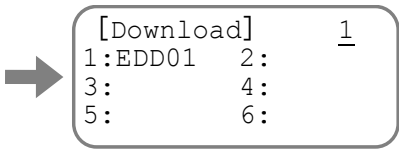

An input to the [ENT] key calls up the confirmation screen of notice.

ENT

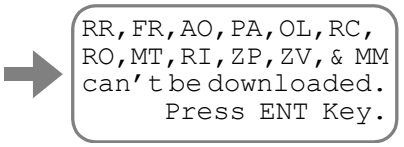

Press the [ENT] key again for the confirmation screen to start downloading.

ENT

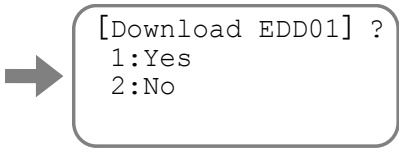

(4) Press the keys in order of [1] and [ENT] to start downloading.

1 # ENT

The display scrolls in high speed while downloading. At the completion of downloading, the display menu changes to the editing menu in the user state.

It changes to the normal mode by a press of the [BS] while pressing the [SHIFT] key.

2) Input the settings of parameters AO (Absolute position scale offset) and MM (Multi-line monitor), which have been noted previously.

(1) Input the parameter AO.

/ N S K SP
O N ENT
A O 1 # 2 $ 3 < 4 >
5 % 6 & ENT

(2) Input the parameter MM.

/ N S K SP
O N ENT
M M 1 # ENT

(3) Turn off the power for the completion.

Appendix 3-2: Back up Manually

- This section describes how to manually back up the settings of parameters, programs and control inputs and outputs individually by hand.

Preparation

- Handy Terminal FHT31, FHT21 or FHT11.

Backup of the settings

1) Monitor the settings of parameters.
Follow the procedure below and note down the settings.

(1) Monitor the settings by the command TS (Tell setting).
Input as "TS0".

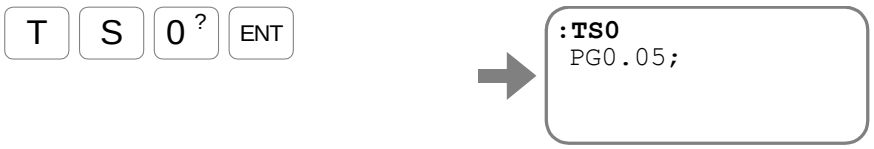

Firstly, the setting of the parameter PG (Position gain) will be monitored.

(2) Every input of the SP monitors, a setting will be read out. Input the SP several times to read out all settings of parameters.

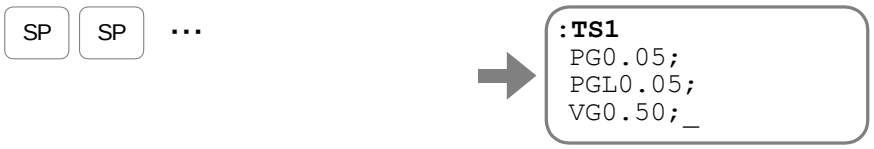

The prompt ": (colon)" appears on the screen for the completion of monitoring.

2) Monitor the settings of programs.
Follow the procedures below and note down the settings.

(1) Monitor all programs by the command TC/AL (Tel all channel program).

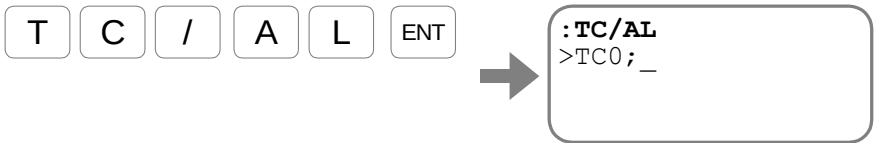

All program channel settings will be read out.

(2) Every input of the SP key reads out the program lines one by one. Input the SP key several times to read out all settings.

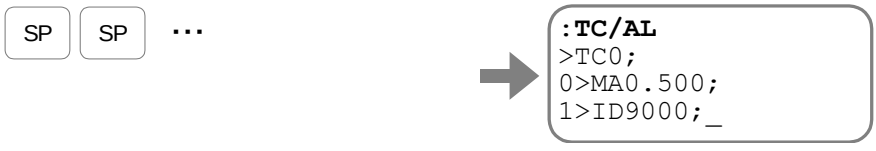

3) Monitor the settings of control inputs and outputs.
Follow the procedure below for monitoring.

(1) Monitor all settings of input function by the command TPI/AL (Tell all input port).

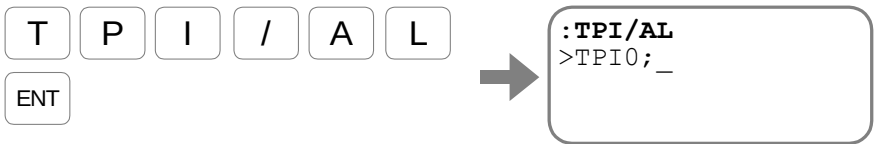

This reads out all settings of control inputs.

(2) Every input of the SP key reports the settings one by one on the line. Input the SP key several times to monitor all of them.

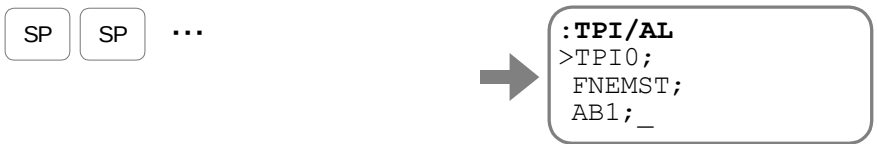

4) Monitor the settings of control outputs.
Follow the procedure below for monitoring.

(1) Monitor all settings of control outputs by the command TPO/AL (Tell all output port).

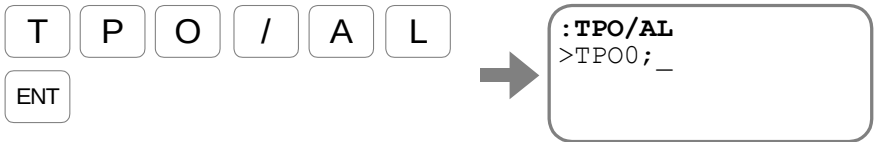

This reads out all

(2) Every input of the SP key will report the settings one by one on the line. Input the SP key several times to monitor all of them.

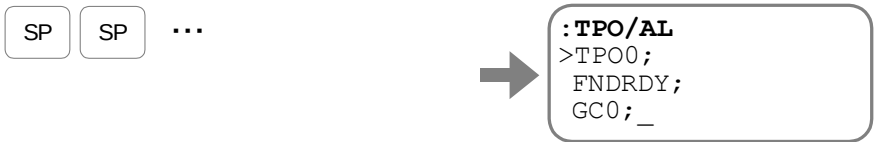

How to restore the settings

(1) Restore all settings that have been noted down in the above procedures.

◊ Refer to “Initialization of the Driver Unit” in “Appendix 5: Procedure for Replacing Driver Unit Model EDD” for initialization.

◊ Some of the parameters require an entry of the password.

(2) Turn off the power for the completion.

Appendix 3-3: Using Megaterm

- You can use EDD Megaterm.

Preparation

- A personal computer with EDD Megaterm installed
- USB communication cable

Backup by using EDD Megaterm

- This uses the functions of Megaterm to save parameters and programs.

1) Connect Driver Unit and personal computer using a USB communication cable.
2) Turn on the power of Driver Unit and personal computer.
3) Start up EDD Megaterm and click "Connect."
4) Confirm the contents using parameter edition screen (Param) and program edition screen (Channel).

Fig A-12: Parameter edition screen (Reference)

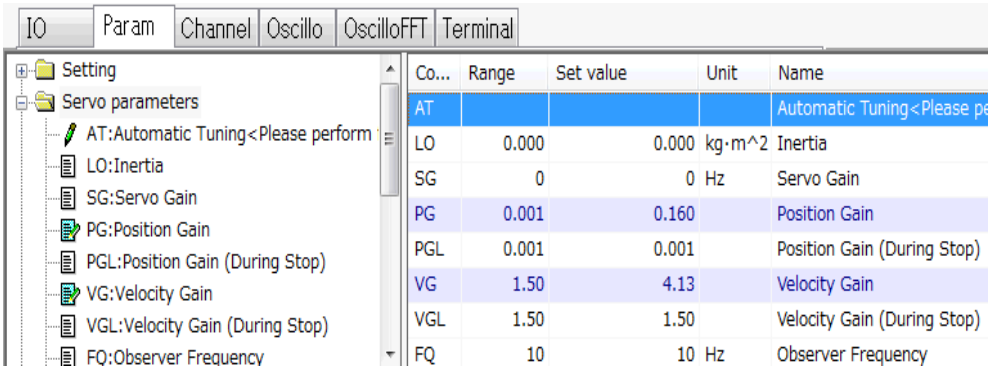

5) Select "Save as (A)" from the menu bar.
6) When the dialog box for saving is opened, define the file name and save.
7) Disconnect the communication. Click "Disconnect."
8) Terminate EDD Megaterm and turn off the power of Driver Unit for completion.

Restoring by EDD Megaterm

1) Connect Driver Unit and personal computer using a USB communication cable.
2) Turn on the power of Driver Unit and personal computer.
3) Start up EDD Megaterm and click "Connect."
4) Select "Open" in the menu bar. Click "..." from the dialog box to select the object file, and click "OK".
   - ◊ Confirm that the check box of writing area has been checked.
   - ◊ For Restoring, the relevant devices have to be in connection.

Fig A-13: Specifying the file to be opened (Selecting "Confirming message for writing")

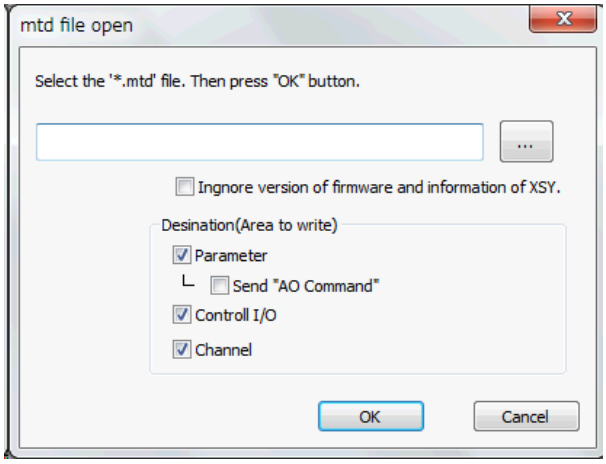

◊ Tick "Send AO command." when sending the Home offset value of Motor.

5) The Confirmation message for writing dialog box will be displayed. Click "OK" to end.

Fig A-14: Confirmation message for writing

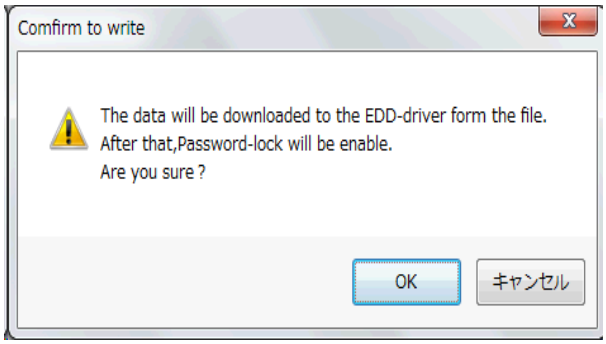

6) This process will be completed when Writing completion dialog box is displayed. Click "OK" to end.

Fig A-15: Confirmation message for writing

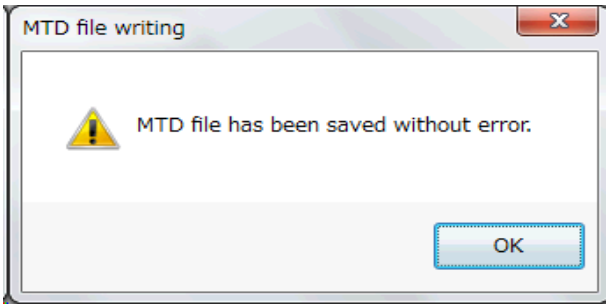

7) Disconnect the communication. Click "Disconnect".

8) Terminate EDD Megaterm and turn off the power of Driver Unit to complete the work.

Appendix 4: Handling of Saved Data in Megaterm

- The data file saved in EDC type (with extension .mtd and txt) are not compatible with EDD Megaterm.
- When such data are used in EDD Megaterm, encode the data file.

Character code information for saved data in Megaterm

Table A-10: Character code information for saved data in Megaterm

Megaterm type	character code	extension
EDD Megaterm	Unicode	mtd
EDC Megaterm	SJIS (ANSI)	mtd, txt

Encoding

(1) Open the object file by text editor (Notepad).

(2) Change the character code of the opened file and save it using "Save as."

◊ Change the character code from ANSI to Unicode.

(3) The process is completed when saving is done.

◊ This file is now usable in EDD Megaterm.

Writing the encoded file to Driver Unit Model EDD

(1) Start up EDD Megaterm and click "Connect".

(2) Select "Open" in the menu bar. Click "..." in the dialog box and click "OK".

◊ Confirm that the checkbox of "Ignore version of firmware and information of XSY" and "Area to write" are already ticked.

Fig A-16: Specifying the file to open (Selecting "Confirming message for writing")

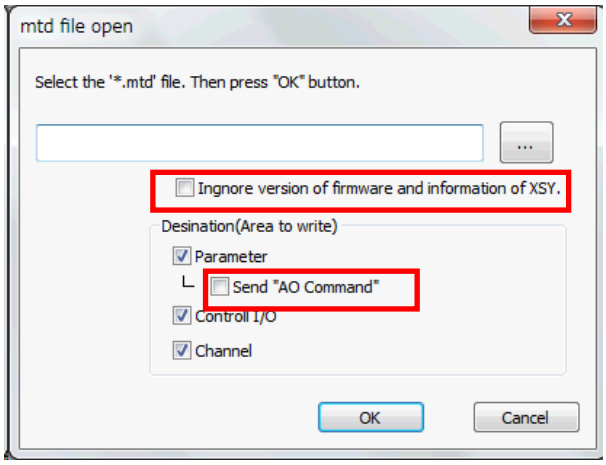

◊ Tick "Send AO command." when sending the Home offset value of Motor.

- The Confirmation message for writing dialog box will be displayed. Click "OK" to end.

Fig A-17: Confirmation message for writing

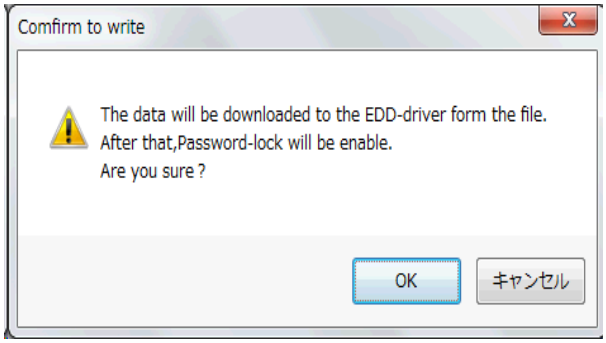

- This process will be completed when Writing completion dialog box is displayed. Click "OK" to end.

Fig A-18: Confirmation message for writing

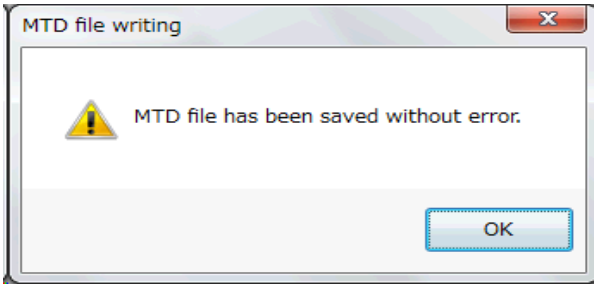

- Writing has been completed.

◊ Confirm the data by using parameter edition or program edition screen of Megaterm.

Appendix 5: Procedure for Replacing Driver Unit Model EDD

- Follow the procedures described in this section when the initialization of the Driver Unit is required during troubleshooting or replacing the Driver Unit and/or the Motor.

Confirmation of interchangeability

- Reference number coding of the Driver Unit Model EDD shown below indicates that the Driver Unit is interchangeable with other Driver Units Model EDD.

Fig A-19: Indication of interchangeability of the Driver Units Model EDD

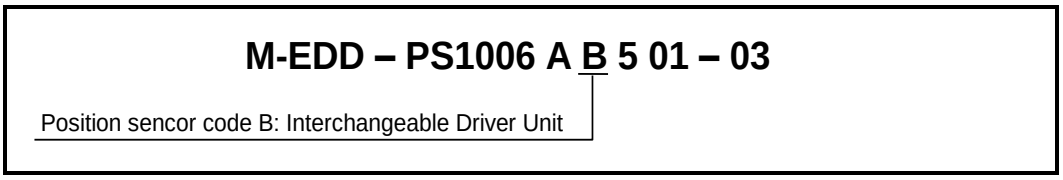

- The Driver Units Model EDD are interchangeable with each other. Replace a Driver Unit with the one that has the same reference number, and then restore the settings of the parameters, the internal channel programs and the control inputs and outputs, that have been copied from the old one.

Preparation

- Handy Terminal FHT31, FHT21 or FHT11

Back up the settings of the Driver Unit

1) Refer to "Appendix 3: How to Back up and Restore the Settings of Programs and Parameters" for backing up the whole settings of the Driver Unit to be replaced.

2) Replace the Driver Unit.

Initialization of the Driver Unit

- All parameters have been initialized when it is shipped from the plant. If your Driver Unit is a new one, the initialization is not necessary.

1) Turn on only the control power of the Driver Unit.

(1) Turn off the main power supplied to the Driver Unit.

(2) Input the command MO (Servo off).

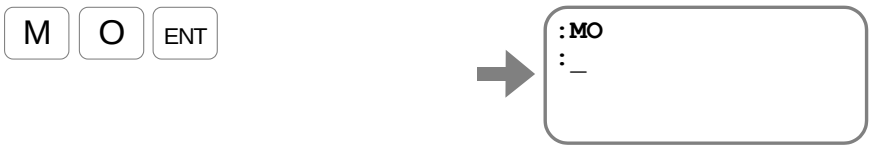

This will prohibit the Driver Unit from activating the Motor servo even the main power is turned on and the input SVON (Servo on) is activated.

2) Perform initialization (restoring the shipping set) of the whole settings.

(1) Initialize the settings of parameters.
Input the command SI/AL (Set all initial parameters) (It requires an input of the password.)

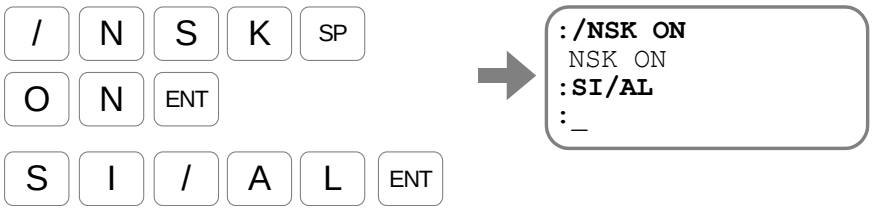

The prompt ": (colon)" appears on the last line of the screen at the completion of the initialization.
Since with EDD Megaterm the connection is disconnected, follow the operation below after connection.

(2) Initialize the settings of the programs.
Input the command CC/AL (Clear all channel.
(It requires an input of the password.)

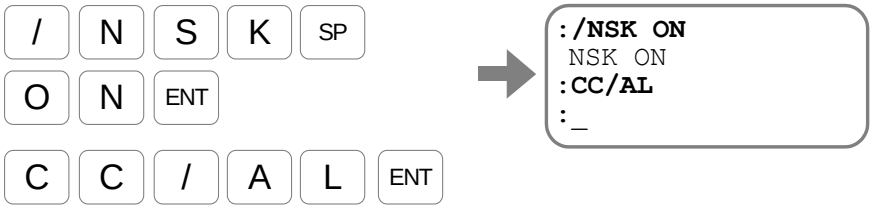

The prompt ": (colon)" appears on the last line of the screen at the completion of the initialization.

(3) Initialize the settings of control inputs. Input the command PI/CL (Edit all input ports).
(It requires an input of the password.)

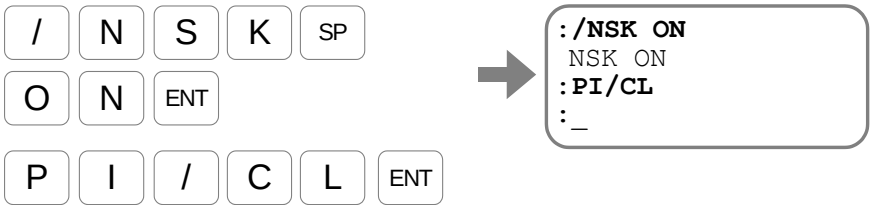

The prompt ": (colon)" appears on the last line of the screen at the completion of the initialization.
Initialize together the settings of control outputs.
Input the command PO/CL (Edit all output port).
(It requires an entry of the password.)

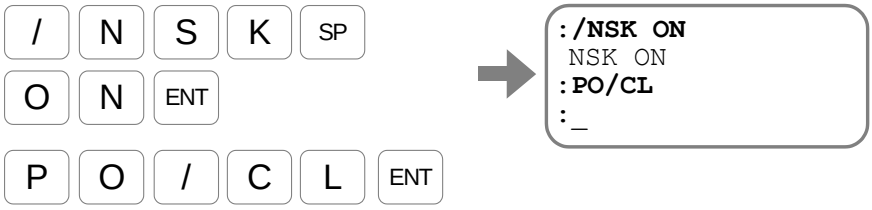

The prompt ": (colon)" appears on the last line of the screen at the completion of the initialization.

Restore of the Driver Unit

1) Refer to "Appendix 3: How to Back up and Restore the Settings of Programs and Parameters" for backing up the whole settings of the Driver Unit to be replaced.

2) Turn off the power for the completion.

Appendix 6: Regeneration Resistor

- A Megatorque Motor works as a generator in the following cases. This is called regeneration.

  (1) When the Motor is decelerating with a heavy inertial load.

  (2) When the axis of the Motor is horizontal and an unbalanced load is giving a torque load, which is induced by the gravity, to the Motor.

- The energy resulted from the regeneration (regenerative energy) will be charged to the capacitor provided to the main power circuit of the Driver Unit. However, if the regenerative energy exceeds the capacity of the capacitor, which is 28 J at 200 [VAC], the Motor will be stopped by the alarm P1 (Main Power Over Voltage).
  In such a case, the following measures shall be taken.

  ◊ Decrease acceleration and deceleration.

  ◊ Decrease velocity.

  ◊ Decrease the load moment of inertia.

If you do not want to downgrade the operational conditions, an optional external regeneration resistor with high durability may be used without downgrading the performance of the Megatorque Motor System.

◊ An optional regeneration resistor such as [M-E014DCKR1-100] is available from NSK Ltd.

Procedures to install the external regeneration resistor

1) Confirm that the Motor cable is connected as shown in Figure A-22 below.

Fig A-20: Shipping set of the Motor cable connection

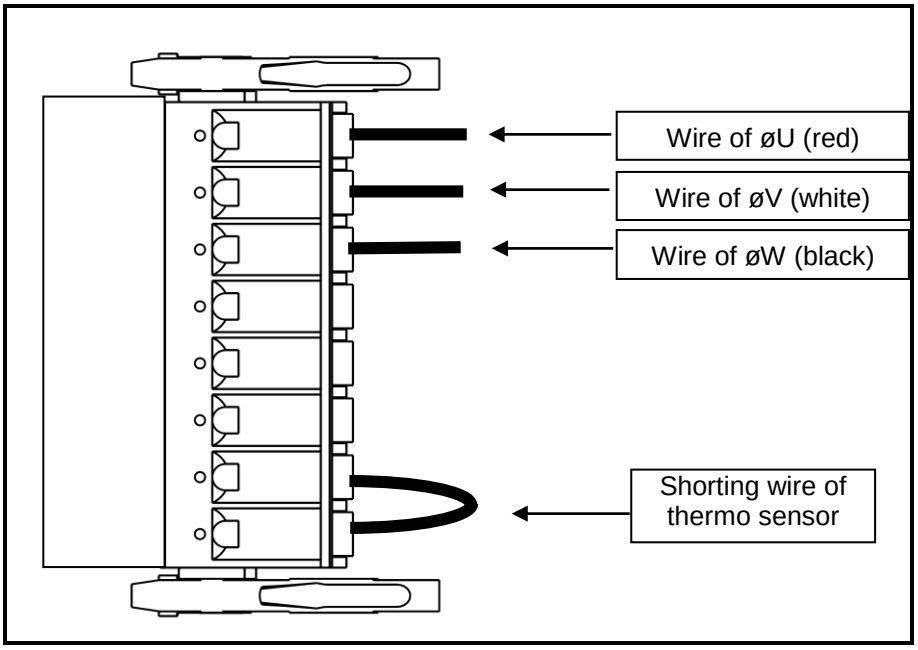

2) Remove the shorting wire of thermo sensor using a removing tool. Connect the cable of regeneration resistor and the sensor cable. A thicker cable pair is the resistor cable while a thinner cable pair is the sensor cable. No polarity is set to the both pairs.

Fig A-21: Connection of external regeneration resistor

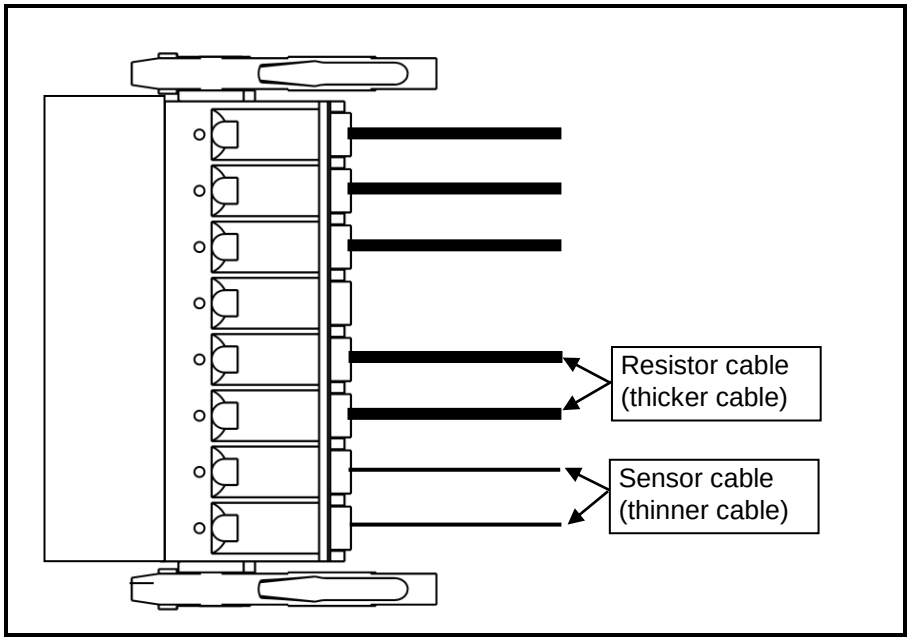

Appendix 7: Wiring of RS-232C Communication Cable

- If any terminal other than the NSK Handy Terminal FHT31 is used, follow the specifications of the higher level control device for wiring the RS-232C communication cable.
- Following examples shown in Figure A-24 and Figure A-25 are for the connection with a personal computer compatible with DOS/V (D-sub 9 pins connector).

RTS control/CTS monitoring active (standard)

Fig A-22: Wiring example: With flow control

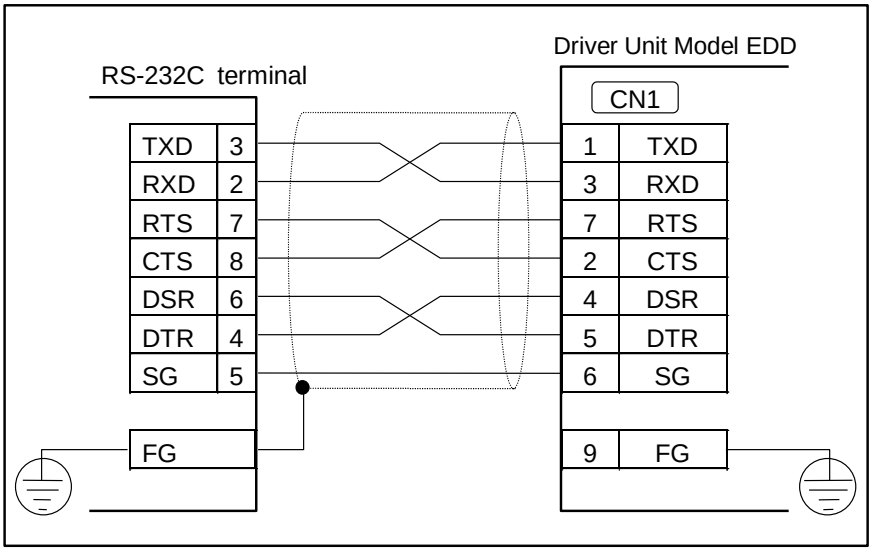

RTS control/CTS monitoring inactive

- Since this connection applies to non-procedural communication, the Driver Unit Model EDD may fail to read data if a large amount of data is received too quickly. Make sure that the Driver Unit Model EDD echoes back, or leave spaces between the data transmission.
- Be sure to short the signals of RTS and CTS of the Driver Unit.
  - ◊ Otherwise the communication will be disabled.

Fig A-23: Wiring example: Without flow control

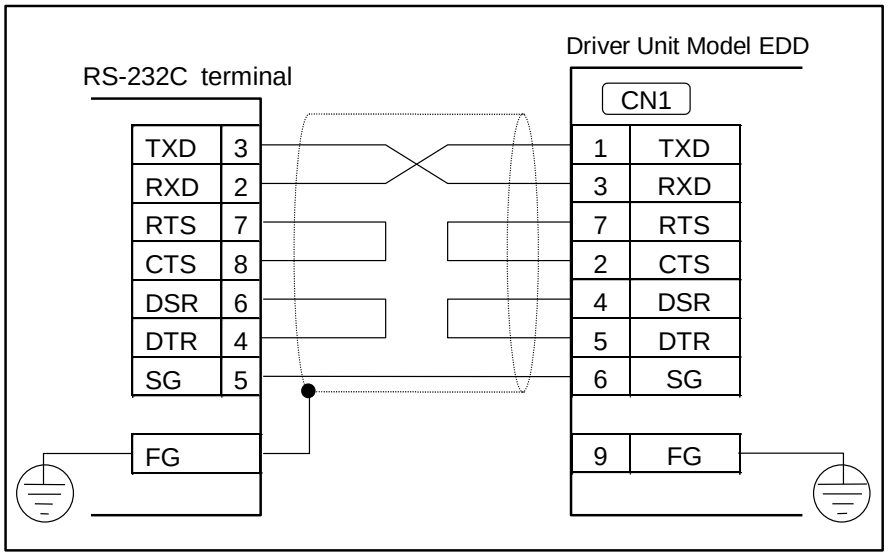

Appendix 8: USB Communication Cable

- Be sure to use the recommended products for USB Communication cables and ferrite cores.
- Please install ferrite cores in three turns.

Fig A-24: Installing USB Communication Cable and ferrite core

Table A-11: Recommended USB Communication Cables

Type	Maker	Cable length
U2C-30BK	ELECOM	3m

Table A-12: Recommended Ferrite Cores

Type	Maker	Impedance specification (100[MHz], 3 turns)	Applicable cable (Max.) [mm]
E04SR241336 A	Seiwa Electric MFG	1000 [Ω]	φ10.0 to 13.0

Appendix 9: Setting List of Parameter and Program of Driver Unit Model EDD

Reference Number:
S/N:

Parameter Setting List

A blank box denotes that the setting is the shipping set.

Date:

Parameter	Setting		Parameter	Setting		Parameter	Setting	
	Shipping set	User setting		Shipping set	User setting		Shipping set	User setting
PG	0.001		★ A0	0		TEU	0	
PGL	0.001		MV	1.000		TEO	0	
VG	1.50		MA	1.0		TVU	0.000	
VGL	1.50		MB	0.0		TVO	0.000	
FQ	10		JV	0.100		TVEU	0.000	
LG	50.00		JA	1.0		TVEO	0.000	
LB	0.00		JB	0.0		TTU	0.00	
★ TL	100.00		MD	0.0		TTO	0.00	
GP	0		HV	0.200		TJU	0.00	
GT	0.0		HA	1.0		TJO	0.00	
FO	0.000		HB	0.0		MN	0	
FP	0		HZ	0.010		MNR	10.000	
FS	0		CSA	1		MNY	0	
NP	0		CSB	0		MX	0	
NPQ	0.25		★ QR	360000		MXR	10.000	
NS	0		OE	0		MXY	0.000	
NSQ	0.25		PK	0		★ MM	1	
★ DBP	0		★ AE	-1		★ BM	1	
★ BL	100.00		★ OS	6		★ WM	0	
★ FF	1.0000		★ HD	1		★ EC	0	
★ ZF	1		★ HO	0		MR	0.0	
CO	200 000		★ SQ	0		★ PP	1	
IN	400		OV	100.00		★ LO	0.000	
IS	0.0		BW	0.0		SG	0	
FW	-1.0		NA	0		★ ZP	1.00	
★ CR	2 621 440		NB	0		★ SL	3	
★ PC	0		ZAS	0		★ AC	0	
★ PM	0		ZAE	0		★ AG	1	
★ FD	0		ZAW	0.0		★ AF	0	
★ FZ	0		ZBS	0		★ DBA	0	
★ FR	81 920		ZBE	0		AFP	200	
★ PS	1		ZBW	0.0		★ AFS	0	
★ DI	0		ZCS	0		SF	0	
★ OTP	0		ZCE	0				
★ OTM	0		ZCW	0.0				

★: Requires an input of the password.

Reference number: ____________

S/N: ____________

Program Setting List

A blank box is not in use.

Date: ____________

CH	Program	CH	Program	CH	Program	CH	Program
0	Command:						

Reference Number :
S/N:

Control Input/Output Setting List

Date:

Control input							Control output						
Port No.	Shipping set			User setting			Port No.	Shipping set			User setting		
	FN	AB	NW	FN	AB	NW		FN	GC	ST	FN	GC	ST
PI0	EMST	1	0.2				PO0	DRDY	0	0.0			
PI1	ACLR	0	0.2				PO1	WRN	1	0.0			
PI2	OTP	1	0.2				PO2	OTPA	1	0.0			
PI3	OTM	1	0.2				PO3	OTMA	1	0.0			
PI4	SVON	0	0.2				PO4	SVST	0	0.0			
PI5	RUN	0	0.2				PO5	BUSY	0	0.0			
PI6	STP	0	0.2				PO6	IPOS	0	0.0			
PI7	PRG0	0	0.2				PO7	NEARA	0	0.0			
PI8	PRG1	0	0.2										
PI9	PRG2	0	0.2										
PI10	PRG3	0	0.2										
PI11	PRG4	0	0.2										
PI12	PRG5	0	0.2										
PI13	PRG6	0	0.2										
PI14	PRG7	0	0.2										
PI15	JOG	0	0.2										
PI16	DIR	0	0.2										

MEGATORQUE MOTOR SYSTEM

User's Manual

(Driver Unit Model EDD)

Document Number: C20201-02

Feb 8, 2019	1st Edition	1st Printing
Apr 5, 2019	2st Edition	1st Printing

NSK Ltd.

MOTION & CONTROL™

NSK

Worldwide Sales Offices

P: Phone ☆: Head Office

NSK LTD. HEADQUARTERS, TOKYO JAPAN
INDUSTRIAL MACHINERY BUSINESS DIVISION-HEADQUARTERS P: +81-3-3779-7227
AUTOMOTIVE BUSINESS DIVISION-HEADQUARTERS P: +81-3-3779-7189

Africa

South Africa:
NSK SOUTH AFRICA (PTY) LTD.
SANDTON P: +27-11-458-3600

Aisia and Oceania

Australia:
NSK AUSTRALIA PTY. LTD.
MELBOURNE ☆ P: +61-3-9765-4400
SYDNEY P: +61-2-9839-2300
BRISBANE P: +61-7-3347-2600
PERTH P: +61-8-9256-5000
New Zealand:
NSK NEW ZEALAND LTD.
AUCKLAND P: +64-9-276-4992
China:
NSK (SHANGHAI) TRADING CO., LTD.
JIANGSU ☆ P: +86-512-5796-3000
NSK (CHINA) INVESTMENT CO., LTD.
JIANGSU P: +86-512-5796-3000
BEIJING P: +86-10-6590-8161
TIAN JIN P: +86-22-8319-5030
CHANGCHUN P: +86-431-8898-8682
SHENYANG P: +86-24-2334-2868
DALIAN P: +86-411-8800-8168
NANJING P: +86-25-8472-6671
FUZHOU P: +86-591-8380-1030
WUHAN P: +86-27-8556-9630
QINGDAO P: +86-532-5568-3877
GUANGZHOU P: +86-20-3817-7800
CHANGSHA P: +86-731-8571-3100
LUOYANG P: +86-379-6069-6188
XI'AN P: +86-29-8765-1896
CHONGQING P: +86-23-6806-5310
CHENGDU P: +86-28-8528-3680
NSK CHINA SALES CO., LTD.
JIANGSU P: +86-512-5796-3000
NSK HONG KONG LTD.
HONG KONG ☆ P: +852-2739-9933
SHENZHEN P: +86-755-25904886
Taiwan:
TAIWAN NSK PRECISION CO., LTD.
TAIPEI ☆ P: +886-2-2772-3355
TAICHUNG P: +886-4-2708-3393
TAINAN P: +886-6-215-6058
India:
NSK BEARINGS INDIA PRIVATE LTD.
CHENNAI ☆ P: +91-44-2847-9600
DELHI P: +91-124-4838000
MUMBAI P: +91-22-2838-7787
Indonesia:
PT. NSK INDONESIA
JAKARTA P: +62-21-252-3458
Korea:
NSK KOREA CO., LTD.
SEOUL P: +82-2-3287-0300
Malaysia:
NSK BEARINGS (MALAYSIA) SDN.BHD.
SHAH ALAM ☆ P: +60-3-7803-8859
PRAI P: +60-4-3902275
JOHOR BAHRU P: +60-7-3546290
IPOH P: +60-5-2555000
Philippines:
NSK REPRESENTATIVE OFFICE
MANILA P: +63-2-893-9543
Singapore:
NSK INTERNATIONAL (SINGAPORE) PTE LTD.
SINGAPORE P: +65-6496-8000
NSK SINGAPORE (PRIVATE) LTD.
SINGAPORE P: +65-6496-8000
Thailand:
NSK BEARINGS (THAILAND) CO., LTD.
BANGKOK P: +66-2320-2555
Vietnam:
NSK VIETNAM CO., LTD.
HANOI P: +84-24-3955-0159
NSK REPRESENTATIVE OFFICE
HO CHI MINH CITY P: +84-28-3822-7907

Europe

United Kingdom:
NSK EUROPE LTD. (EUROPEAN HEADQUARTERS)
MAIDENHEAD P: +44-1628-509-800
NSK UK LTD.
NEWARK P: +44-1636-605-123
France:
NSK FRANCE S.A.S.
PARIS P: +33-1-30-57-39-39
Germany:
NSK DEUTSCHLAND GMBH
DUSSELDORF ☆ P: +49-2102-4810
STUTTGART P: +49-711-79082-0
WOLFSBURG P: +49-5361-27647-10
Italy:
NSK ITALIA S.P.A.
MILANO P: +39-299-5191
Netherlands:
NSK EUROPEAN DISTRIBUTION CENTRE B.V.
TILBURG P: +31-13-4647647
Poland:
NSK REPRESENTATIVE OFFICE
WARSAW P: +48-22-645-1525
Russia:
NSK POLSKA SP. Z O.O.
SAINT-PETERSBURG P: +7-812-332-5071
Spain:
NSK SPAIN S.A.
BARCELONA P: +34-93-289-2763
Turkey:
NSK RULMANLARI ORTA DOGU TIC. LTD. STI.
ISTANBUL P: +90-216-477-7111
United Arab Emirates:
NSK BEARINGS GULF TRADING CO.
DUBAI P: +971-4-804-8207

North and South America

United Sates of America:
NSK AMERICAS, INC. (AMERICAN HEADQUARTERS)
ANN ARBOR P: +1-734-913-7500
NSK CORPORATION
ANN ARBOR P: +1-734-913-7500
NSK PRECISION AMERICA, INC.
FRANKLIN ☆ P: +1-317-738-5000
SAN JOSE P: +1-408-944-9400
NSK LATIN AMERICA, INC.
MIAMI P: +1-305-477-0605
Canada:
NSK CANADA INC.
TORONTO ☆ P: +1-905-890-0740
MONTREAL P: +1-514-633-1220
VANCOUVER P: +1-877-994-6675
Argentina:
NSK ARGENTINA SRL
BUENOS AIRES P: +54-11-4704-5100
Brazil:
NSK BRASIL LTDA.
SUZANO ☆ P: +55-11-4744-2500
BELO HORIZONTE P: +55-31-3274-2591
JOINVILLE P: +55-47-3422-2239
PORTO ALEGRE P: +55-51-3346-7851
RECIFE P: +55-81-3326-3781
Peru:
NSK PERU S.A.C.
LIMA P: +51-1-493-4385
Mexico:
NSK RODAMIENTOS MEXICANA, S.A. DE C.V.
MEXICO CITY ☆ P: +52-55-3682-2900
MONTERREY P: +52-81-8000-7300

<As of October 2018>

For the latest information, please refer to the NSK website.

www.nsk.com

NSK Ltd. has a basic policy not to export any products or technology designated as controlled items by export-related laws. When exporting the products in this brochure, the laws of the exporting country must be observed. Specifications are subject to change without notice and without any obligation on the part of the manufacturer. Every care has been taken to ensure the accuracy of the data contained in this brochure, but no liability can be accepted for any loss or damage suffered through errors or omissions. We will gratefully acknowledge any additions or corrections.

For more information about NSK products, please contact: